Product data sheet

Specifications

variable speed drive, Altivar Machine ATV340, 1.5kW, heavy duty, 400V, 3 phases, Ethernet

ATV340U15N4E

Product availability: Stock - Normally stocked in distribution facility

Price*: 1,072.26 USD

Main

Range Of Product	Altivar Machine ATV340
Product Or Component Type	Variable speed drive
Product Specific Application	Machine
Variant	Standard version
Mounting Mode	Cabinet mount
Communication Port Protocol	Modbus serial EtherNet/IP Modbus TCP
Phase	3 phase
Supply Frequency	50...60 Hz +/- 5 %
[Us] Rated Supply Voltage	380...480 V - 15...10 %
Nominal Output Current	4.0 A
Motor Power Kw	2.2 kW normal duty 1.5 kW heavy duty
Maximum Horse Power Rating	3 hp normal duty 2 hp heavy duty
Emc Filter	Class C3 EMC filter integrated
Ip Degree Of Protection	IP20

Complementary

Discrete Input Number	5
Discrete Input Type	PTI programmable as pulse input 0…30 kHz, 24 V DC 30 V) DI1...DI5 safe torque off, 24 V DC 30 V)3.5 kOhm programmable
Number Of Preset Speeds	16 preset speeds
Discrete Output Number	2.0
Discrete Output Type	Programmable output DQ1, DQ2 30 V DC 100 mA
Analogue Input Number	2
Analogue Input Type	AI1 software-configurable current 0...20 mA 250 Ohm 12 bits AI1 software-configurable temperature probe or water level sensor AI1 software-configurable voltage 0...10 V DC 31.5 kOhm 12 bits AI2 software-configurable voltage - 10...10 V DC 31.5 kOhm 12 bits
Analogue Output Number	2
Analogue Output Type	Software-configurable voltage AQ1 0...10 V DC 470 Ohm 10 bits Software-configurable current AQ1 0...20 mA 500 Ohm 10 bits

Price is “List Price” and may be subject to a trade discount – check with your local distributor or retailer for actual price.

Disclaimer: This documentation is not intended as a substitute for and is not to be used for determining suitability or reliability of these products for specific user applications

Relay Output Number	2
Output Voltage	<= power supply voltage
Relay Output Type	Relay outputs R1A Relay outputs R1C 100000 cycles Relay outputs R2A Relay outputs R2C 100000 cycles
Maximum Switching Current	Relay output R1C resistive, cos phi = 1 3 A 250 V AC Relay output R1C resistive, cos phi = 1 3 A 30 V DC Relay output R1C inductive, cos phi = 0.4 7 ms 2 A 250 V AC Relay output R1C inductive, cos phi = 0.4 7 ms 2 A 30 V DC Relay output R2C resistive, cos phi = 1 5 A 250 V AC Relay output R2C resistive, cos phi = 1 5 A 30 V DC Relay output R2C inductive, cos phi = 0.4 7 ms 2 A 250 V AC Relay output R2C inductive, cos phi = 0.4 7 ms 2 A 30 V DC
Minimum Switching Current	Relay output R1B 5 mA 24 V DC Relay output R2C 5 mA 24 V DC
Physical Interface	2-wire RS 485
Connector Type	3 RJ45
Method Of Access	Slave Modbus RTU Slave Modbus TCP
Transmission Rate	4.8 kbit/s 9.6 kbit/s 19.2 kbit/s 38.4 kbit/s
Transmission Frame	RTU
Number Of Addresses	1…247
Data Format	8 bits, configurable odd, even or no parity
Type Of Polarization	No impedance
4 Quadrant Operation Possible	True
Asynchronous Motor Control Profile	Constant torque standard Optimized torque mode Variable torque standard
Synchronous Motor Control Profile	Permanent magnet motor Reluctance motor
Pollution Degree	2 IEC 61800-5-1
Maximum Output Frequency	0.599 kHz
Acceleration And Deceleration Ramps	Linear adjustable separately from 0.01...9999 s S, U or customized
Motor Slip Compensation	Adjustable Not available in permanent magnet motor law Can be suppressed Automatic whatever the load
Switching Frequency	2...16 kHz adjustable 8...16 kHz with derating factor
Nominal Switching Frequency	4 kHz
Braking To Standstill	By DC injection
Brake Chopper Integrated	True
Line Current	5.1 A 380 V normal duty) 4.1 A 480 V normal duty) 6.0 A 380 V heavy duty) 4.9 A 480 V heavy duty)

Line Current	6 A 380 V without line choke heavy duty) 4.9 A 480 V without line choke heavy duty) 5.1 A 380 V with external line choke normal duty) 4.1 A 480 V with external line choke normal duty) 3.5 A 380 V with external line choke heavy duty) 2.8 A 480 V with external line choke heavy duty)
Maximum Input Current Per Phase	6.0 A
Maximum Output Voltage	480 V
Apparent Power	3.8 kVA 480 V normal duty) 4.1 kVA 480 V heavy duty)
Maximum Transient Current	6.2 A 60 s normal duty) 6 A 60 s heavy duty) 7.6 A 2 s normal duty) 7.2 A 2 s heavy duty)
Electrical Connection	Screw terminal 1.5...4 mm² line side Screw terminal 4...6 mm² DC bus Screw terminal 1.5...4 mm² motor Screw terminal 0.2...2.5 mm² control
Prospective Line Isc	5 kA
Base Load Current At High Overload	4.0 A
Base Load Current At Low Overload	5.6 A
Power Dissipation In W	Natural convection 46 W 380 V 4 kHz heavy duty) Forced convection 46 W 380 V 4 kHz heavy duty) Natural convection 59 W 380 V 4 kHz normal duty) Forced convection 59 W 380 V 4 kHz normal duty)
Electrical Connection	Line side screw terminal 1.5...4 mm² AWG 14...AWG 12 DC bus screw terminal 4...6 mm² AWG 12...AWG 10 Motor screw terminal 1.5...4 mm² AWG 14...AWG 12 Control screw terminal 0.2...2.5 mm² AWG 24...AWG 12
With Safety Function Safely Limited Speed (Sls)	True
With Safety Function Safe Brake Management (Sbc/Sbt)	True
With Safety Function Safe Operating Stop (Sos)	False
With Safety Function Safe Position (Sp)	False
With Safety Function Safe Programmable Logic	False
With Safety Function Safe Speed Monitor (Ssm)	False
With Safety Function Safe Stop 1 (Ss1)	True
With Sft Fct Safe Stop 2 (Ss2)	False
With Safety Function Safe Torque Off (Sto)	True
With Safety Function Safely Limited Position (Slp)	False
With Safety Function Safe Direction (Sdi)	False

Protection Type	Thermal protection motor Safe torque off motor Motor phase loss motor Thermal protection drive Safe torque off drive Overheating drive Overcurrent drive Output overcurrent between motor phase and earth drive Output overcurrent between motor phases drive Short-circuit between motor phase and earth drive Short-circuit between motor phases drive Motor phase loss drive DC Bus overvoltage drive Line supply overvoltage drive Line supply undervoltage drive Input supply loss drive Exceeding limit speed drive Break on the control circuit drive
Width	3.35 in (85.0 mm)
Height	10.63 in (270.0 mm)
Depth	9.15 in (232.5 mm)
Net Weight	3.75 lb(US) (1.7 kg)
Continuous Output Current	5.6 A 4 kHz normal duty 4 A 4 kHz heavy duty

Environment

Operating Altitude	<= 9842.52 ft (3000 m) with current derating above 1000m
Operating Position	Vertical +/- 10 degree
Product Certifications	UL CSA TÜV EAC CTick
Marking	CE
Standards	IEC 61800-3 IEC 61800-5-1 IEC 60721-3 IEC 61508 IEC 13849-1 UL 618000-5-1 UL 508C
Assembly Style	With heat sink
Electromagnetic Compatibility	Electrostatic discharge immunity test level 3 IEC 61000-4-2 Radiated radio-frequency electromagnetic field immunity test level 3 IEC 61000-4-3 Electrical fast transient/burst immunity test level 4 IEC 61000-4-4 1.2/50 µs - 8/20 µs surge immunity test level 3 IEC 61000-4-5 Conducted radio-frequency immunity test level 3 IEC 61000-4-6
Environmental Class (During Operation)	Class 3C3 according to IEC 60721-3-3 Class 3S3 according to IEC 60721-3-3
Maximum Acceleration Under Shock Impact (During Operation)	70 m/s² at 22 ms
Maximum Acceleration Under Vibrational Stress (During Operation)	5 m/s² at 9...200 Hz
Maximum Deflection Under Vibratory Load (During Operation)	1.5 mm at 2...9 Hz
Permitted Relative Humidity (During Operation)	Class 3K5 according to EN 60721-3
Volume Of Cooling Air	4755.18 Gal/hr(US) (18.0 m3/h)
Type Of Cooling	Forced convection
Overvoltage Category	Class III

Regulation Loop	Adjustable PID regulator
Noise Level	55.4 dB
Pollution Degree	2
Ambient Air Transport Temperature	-40…158 °F (-40…70 °C)
Ambient Air Temperature For Operation	5…122 °F (-15…50 °C) without derating vertical position) 122…140 °F (50…60 °C) with derating factor vertical position)
Ambient Air Temperature For Storage	-40…158 °F (-40…70 °C)
Isolation	Between power and control terminals

Ordering and shipping details

Category	US1CP4B22182
Discount Schedule	CP4B
Gtin	3606480966996
Returnability	Yes
Country Of Origin	US

Packing Units

Unit Type Of Package 1	PCE
Number Of Units In Package 1	1
Package 1 Height	4.33 in (11.000 cm)
Package 1 Width	14.57 in (37.000 cm)
Package 1 Length	12.60 in (32.000 cm)
Package 1 Weight	5.47 lb(US) (2.480 kg)
Unit Type Of Package 2	P06
Number Of Units In Package 2	14
Package 2 Height	29.53 in (75.000 cm)
Package 2 Width	23.62 in (60.000 cm)
Package 2 Length	31.50 in (80.000 cm)
Package 2 Weight	105.20 lb(US) (47.720 kg)

Sustainability

Green Premium™ label is Schneider Electric's commitment to delivering products with best-in-class environmental performance. Green Premium promises compliance with the latest regulations, transparency on environmental impacts, as well as circular and low-CO_2 products.

Guide to assessing product sustainability is a white paper that clarifies global eco-label standards and how to interpret environmental declarations.

Learn more about Green Premium >

Guide to assess a product's sustainability >

Transparency RoHS/REACh

Resource performance

Upgraded Components Available

Well-being performance

Mercury Free

Rohs Exemption Information Yes

Certifications & Standards

Reach Regulation	REACh Declaration
Eu Rohs Directive	Pro-active compliance (Product out of EU RoHS legal scope)
China Rohs Regulation	China RoHS declaration
Environmental Disclosure	Product Environmental Profile
Weee	The product must be disposed on European Union markets following specific waste collection and never end up in rubbish bins.
Circularity Profile	End of Life Information
California Proposition 65	WARNING: This product can expose you to chemicals including: Lead and lead compounds, which is known to the State of California to cause cancer and birth defects or other reproductive harm. For more information go to www.P65Warnings.ca.gov

Dimensions Drawings

Dimensions

Views: Front - Left - Rear

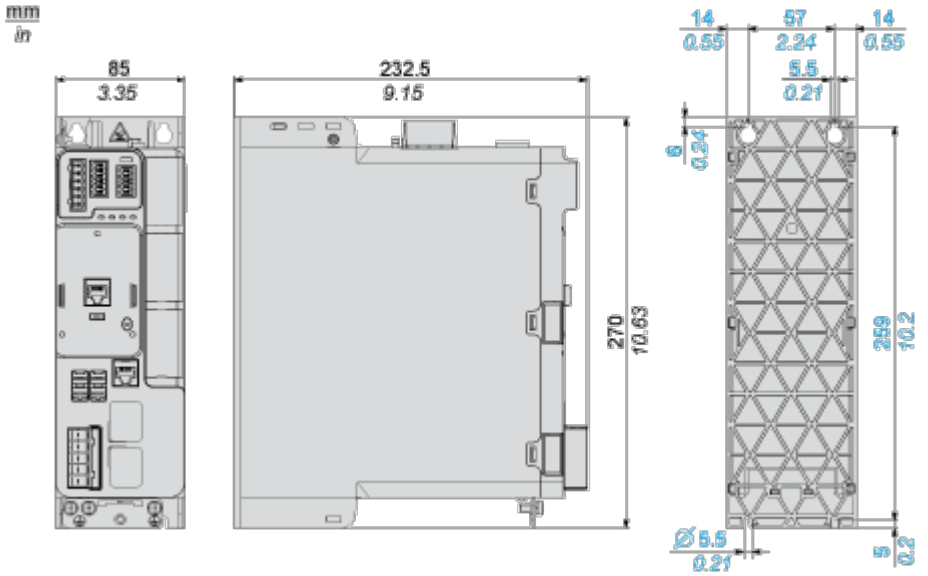

Mounting and Clearance

Clearance

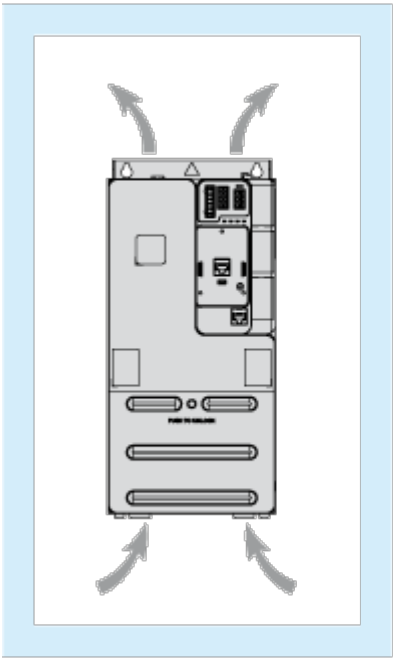

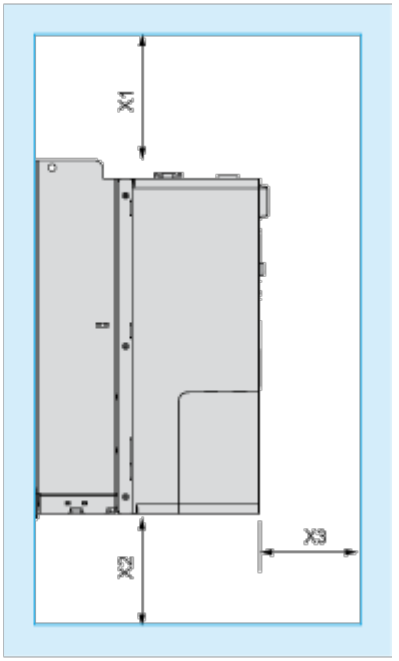

Dimensions in mm

X1	X2	X3
≥ 100	≥ 100	≥ 60

Dimensions in in.

X1	X2	X3
≥ 3.94	≥ 3.94	≥ 2.36

Mounting Types

Mounting Type A: Side by Side IP20

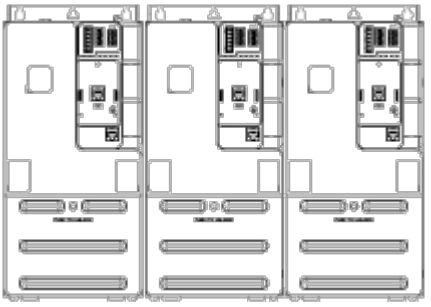

Possible, at ambient temperature ≤ 50 °C (122 °F)

Mounting Type B: Individual IP20

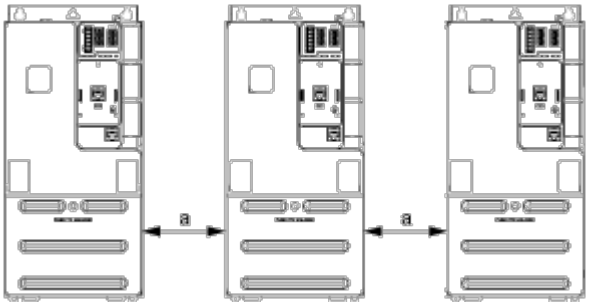

a ≥ 50 mm (1.97 in.) from 50...60°C, no restriction below 50°C

Connections and Schema

Connections and Schema

Three-phase Power Supply with Upstream Breaking via Line Contactor Without Safety Function STO

Connection diagrams conforming to standards ISO13849 category 1 and IEC/EN 61508 capacity SIL1, stopping category 0 in accordance with standard IEC/EN 60204-1.

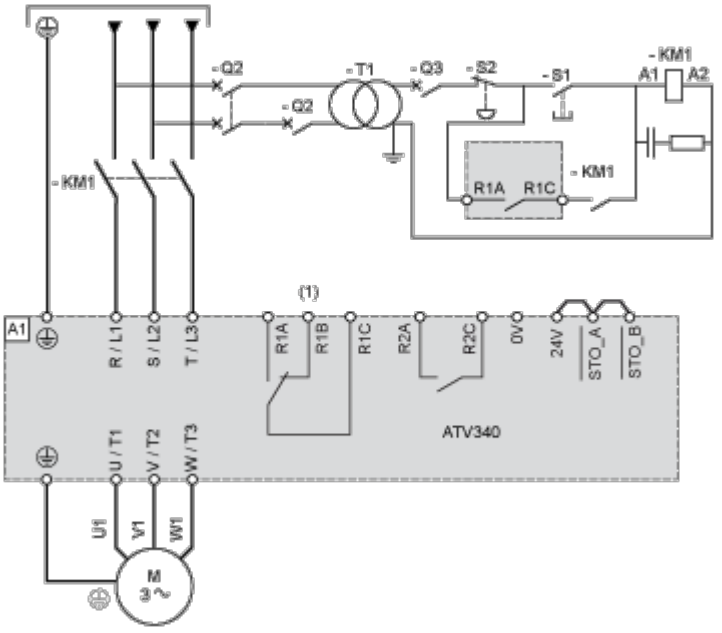

(1) Use relay output R1 set to operating state Fault to switch Off the product once an error is detected.

A1 : Drive

KM1 : Line Contactor

Q2, Q3 : Circuit breakers

S1 : Pushbutton

S2 : Emergency stop

T1 : Transformer for control part

Three-phase Power Supply With Downstream Breaking via Switch Disconnector

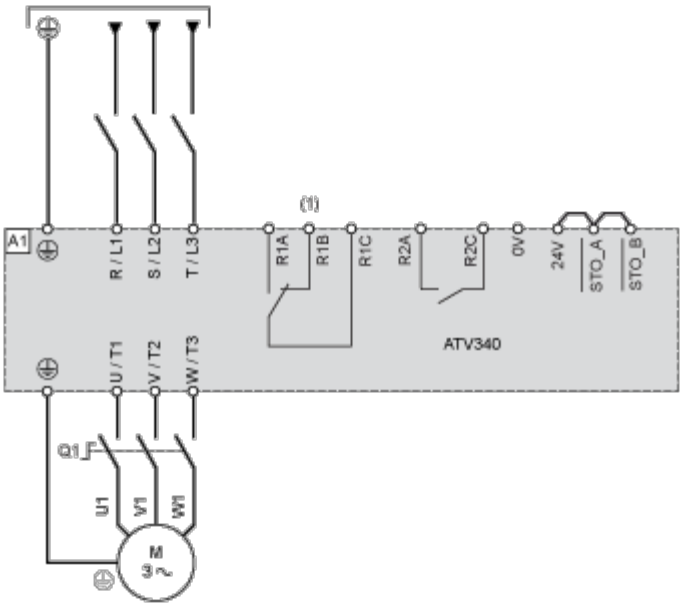

(1) Use relay output R1 set to operating state Fault to switch Off the product once an error is detected.

A1 : Drive

Q1 : Switch disconnector

Sensor Connection

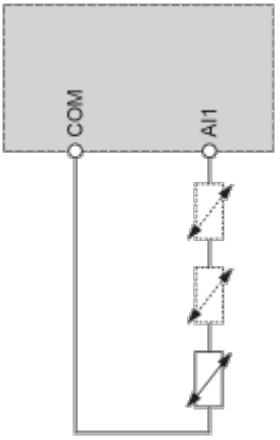

It is possible to connect either 1 or 3 sensors on terminals AI1.

Control Block Wiring Diagram

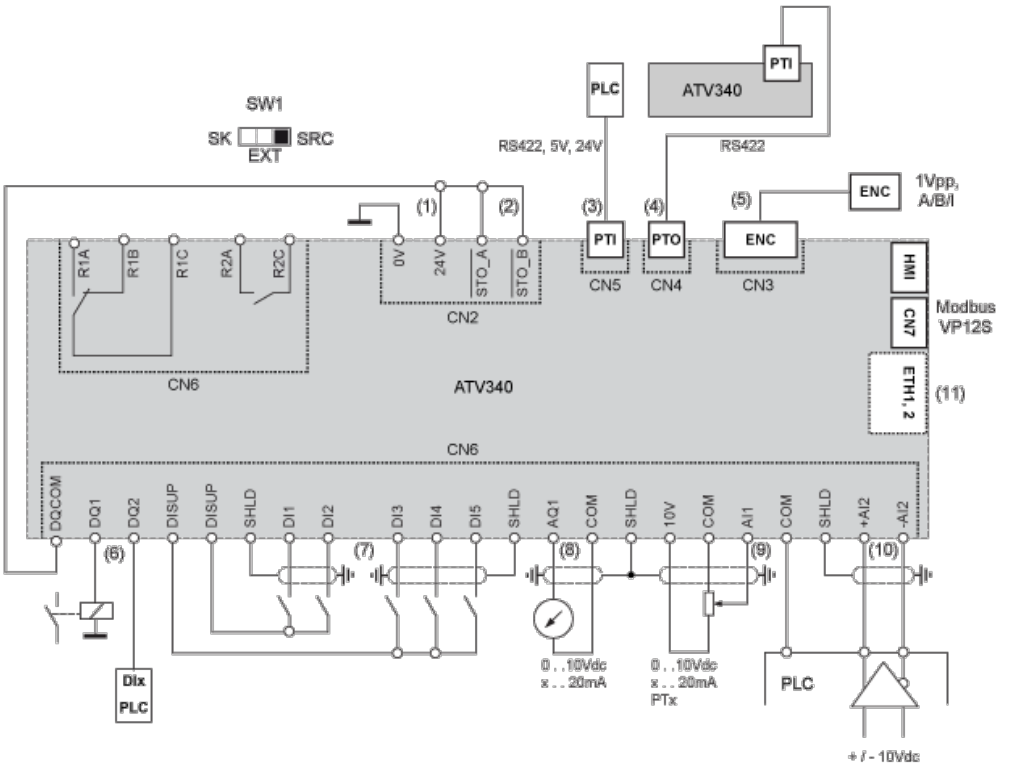

(1) 24V supply (STO)

(2) STO - Safe Torque Off

(3) PTI - Pulse Train In

(4) PTO - Pulse Train Out

(5) Motor Encoder connection

(6) Digital outputs

(7) Digital inputs

(8) Analog output

(9) Analog input

(10) Differential Analog Input

(11) Ethernet port (only on Ethernet drive version)

SW1 : Sink/Source switch

R1A, R1B, R1C : Fault relay

R2A, R2C : Sequence relay

Digital Inputs Wiring

Digital Inputs: Internal Supply

Using DISUP Signal

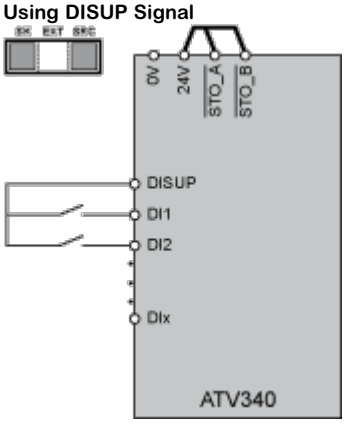

In SRC position DISUP outputs 24 V. In SK position DISUP is connected to 0 V.

Digital Inputs: External Supply

Positive Logic, Source, European Style

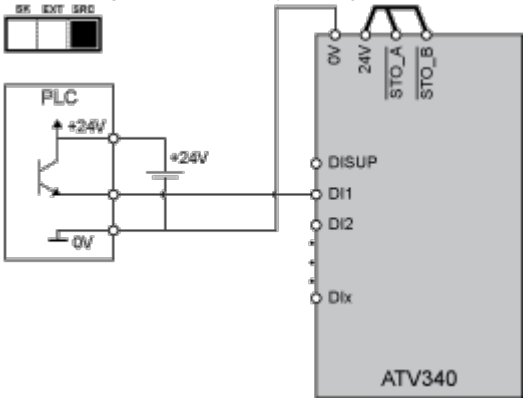

Negative Logic, Sink, Asian Style

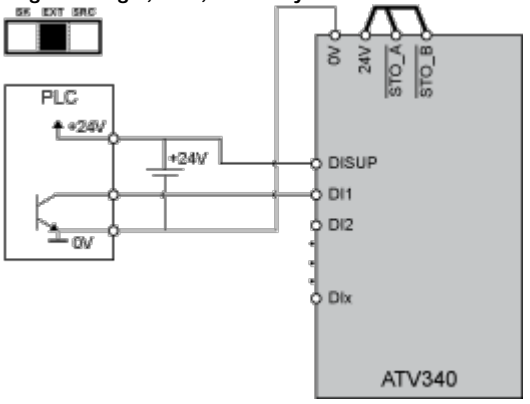

Digital Inputs: Internal supply

Negative Logic, Sink, Asian Style

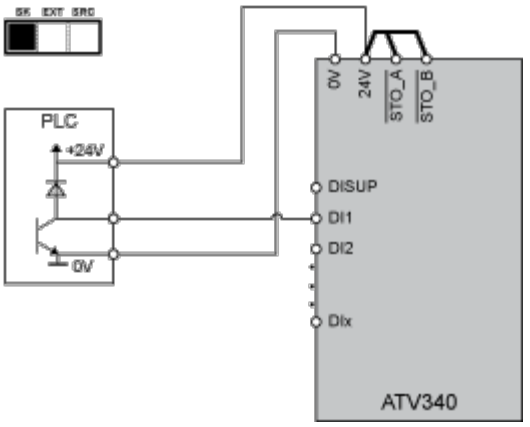
SK EXT SRC
PLC
+24V
0V
0V
24V
STO_A
STO_B
DISUP
DI1
DI2
DIx
ATV340

Digital Outputs Wiring

Digital Outputs: Internal Supply

Positive Logic, Source, European Style, DQCOM to +24V

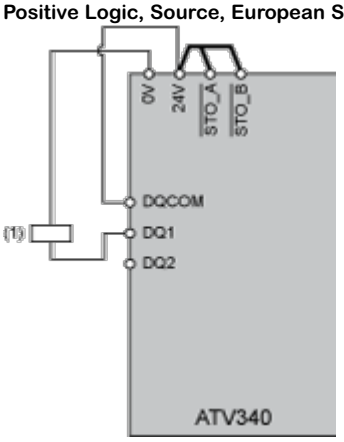

(1) Relay or valve

Negative Logic, Sink, Asian Style, DQCOM to 0V

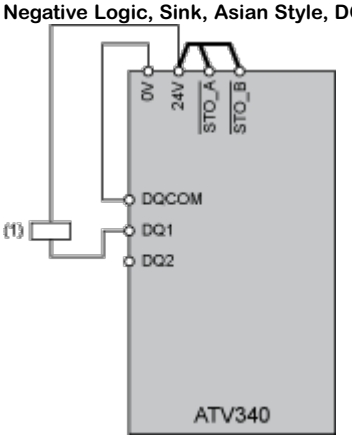

(1) Relay or valve

Digital Outputs: External Supply

Positive Logic, Source, European Style, DQCOM to +24V

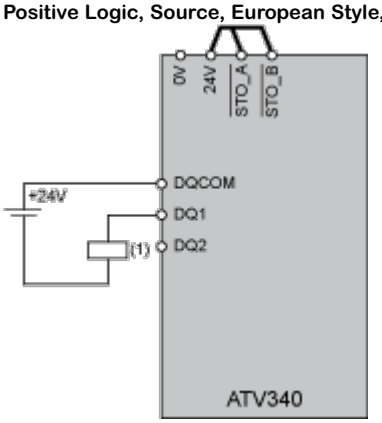

(1) Relay or valve

Negative Logic, Sink, Asian Style, DQCOM to 0V

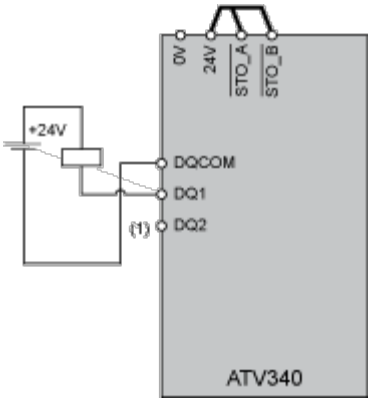

(1) Relay or valve

Performance Curves

Open Loop Applications

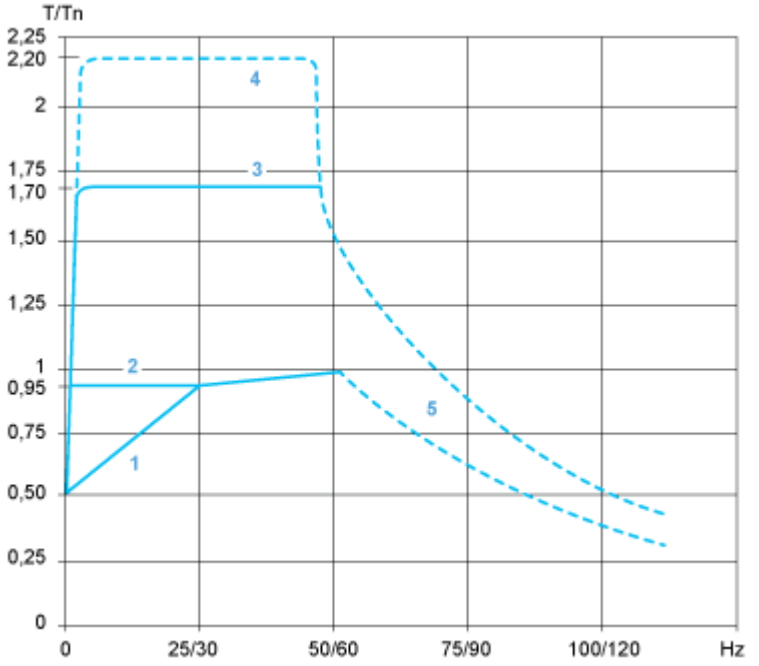

1 : Self-cooled motor: continuous useful torque

2 : Force-cooled motor: continuous useful torque

3 : Overtorque for 60 s maximum

4 : Transient overtorque for 2 s maximum

5 : Torque in overspeed at constant power

Closed Loop Applications

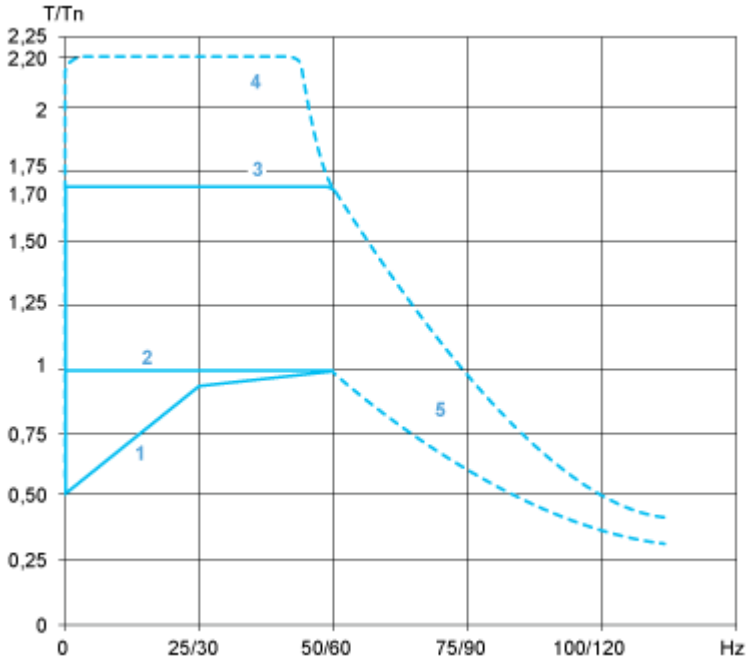

1 : Self-cooled motor: continuous useful torque

2 : Force-cooled motor: continuous useful torque

3 : Overtorque for 60 s maximum

4 : Transient overtorque for 2 s maximum

5 : Torque in overspeed at constant power