# Product data sheet

Specifications

## variable speed drive, Altivar Machine ATV340, 5.5kW, heavy duty, 400V, 3 phases, Ethernet

ATV340U55N4E

**Product availability: Stock - Normally stocked in distribution facility**

**Price*: 1,558.44 USD**

## Main

| | |
|---|---|
| **Range Of Product** | Altivar Machine ATV340 |
| **Product Or Component Type** | Variable speed drive |
| **Product Specific Application** | Machine |
| **Variant** | Standard version |
| **Mounting Mode** | Cabinet mount |
| **Communication Port Protocol** | EtherNet/IP<br>Modbus TCP<br>Modbus serial |
| **Phase** | 3 phase |
| **Supply Frequency** | 50...60 Hz +/- 5 % |
| **[Us] Rated Supply Voltage** | 380...480 V - 15...10 % |
| **Nominal Output Current** | 12.7 A |
| **Motor Power Kw** | 7.5 kW normal duty<br>5.5 kW heavy duty |
| **Maximum Horse Power Rating** | 10 hp normal duty<br>7 hp heavy duty |
| **Emc Filter** | Class C3 EMC filter integrated |
| **Ip Degree Of Protection** | IP20 |

## Complementary

| | |
|---|---|
| **Discrete Input Number** | 5 |
| **Discrete Input Type** | PTI programmable as pulse input 0…30 kHz, 24 V DC 30 V)<br>DI1...DI5 safe torque off, 24 V DC 30 V)3.5 kOhm programmable |
| **Number Of Preset Speeds** | 16 preset speeds |
| **Discrete Output Number** | 2.0 |
| **Discrete Output Type** | Programmable output DQ1, DQ2 30 V DC 100 mA |
| **Analogue Input Number** | 2 |
| **Analogue Input Type** | AI1 software-configurable current 0...20 mA 250 Ohm 12 bits<br>AI1 software-configurable temperature probe or water level sensor<br>AI1 software-configurable voltage 0...10 V DC 31.5 kOhm 12 bits<br>AI2 software-configurable voltage - 10...10 V DC 31.5 kOhm 12 bits |
| **Analogue Output Number** | 2 |
| **Analogue Output Type** | Software-configurable voltage AQ1 0...10 V DC 470 Ohm 10 bits<br>Software-configurable current AQ1 0...20 mA 500 Ohm 10 bits |

Price is “List Price” and may be subject to a trade discount – check with your local distributor or retailer for actual price.

Disclaimer: This documentation is not intended as a substitute for and is not to be used for determining suitability or reliability of these products for specific user applications

| | |
|---|---|
| **Relay Output Number** | 2 |
| **Output Voltage** | <= power supply voltage |
| **Relay Output Type** | Relay outputs R1A<br>Relay outputs R1C 100000 cycles<br>Relay outputs R2A<br>Relay outputs R2C 100000 cycles |
| **Maximum Switching Current** | Relay output R1C resistive, cos phi = 1 3 A 250 V AC<br>Relay output R1C resistive, cos phi = 1 3 A 30 V DC<br>Relay output R1C inductive, cos phi = 0.4 7 ms 2 A 250 V AC<br>Relay output R1C inductive, cos phi = 0.4 7 ms 2 A 30 V DC<br>Relay output R2C resistive, cos phi = 1 5 A 250 V AC<br>Relay output R2C resistive, cos phi = 1 5 A 30 V DC<br>Relay output R2C inductive, cos phi = 0.4 7 ms 2 A 250 V AC<br>Relay output R2C inductive, cos phi = 0.4 7 ms 2 A 30 V DC |
| **Minimum Switching Current** | Relay output R1B 5 mA 24 V DC<br>Relay output R2C 5 mA 24 V DC |
| **Physical Interface** | 2-wire RS 485 |
| **Connector Type** | 3 RJ45 |
| **Method Of Access** | Slave Modbus RTU<br>Slave Modbus TCP |
| **Transmission Rate** | 4.8 kbit/s<br>9.6 kbit/s<br>19.2 kbit/s<br>38.4 kbit/s |
| **Transmission Frame** | RTU |
| **Number Of Addresses** | 1…247 |
| **Data Format** | 8 bits, configurable odd, even or no parity |
| **Type Of Polarization** | No impedance |
| **4 Quadrant Operation Possible** | True |
| **Asynchronous Motor Control Profile** | Optimized torque mode<br>Constant torque standard<br>Variable torque standard |
| **Synchronous Motor Control Profile** | Reluctance motor<br>Permanent magnet motor |
| **Pollution Degree** | 2 IEC 61800-5-1 |
| **Maximum Output Frequency** | 0.599 kHz |
| **Acceleration And Deceleration Ramps** | Linear adjustable separately from 0.01...9999 s<br>S, U or customized |
| **Motor Slip Compensation** | Automatic whatever the load<br>Can be suppressed<br>Adjustable<br>Not available in permanent magnet motor law |
| **Switching Frequency** | 2...16 kHz adjustable<br>7...16 kHz with derating factor |
| **Nominal Switching Frequency** | 4 kHz |
| **Braking To Standstill** | By DC injection |
| **Brake Chopper Integrated** | True |
| **Line Current** | 15.3 A 380 V normal duty)<br>12.2 A 480 V normal duty)<br>20.0 A 380 V heavy duty)<br>16.0 A 480 V heavy duty) |

| | |
|---|---|
| **Line Current** | 20 A 380 V without line choke heavy duty)<br>16 A 480 V without line choke heavy duty)<br>15.3 A 380 V with external line choke normal duty)<br>12.2 A 480 V with external line choke normal duty)<br>11.6 A 380 V with external line choke heavy duty)<br>9.4 A 480 V with external line choke heavy duty) |
| **Maximum Input Current Per Phase** | 20.0 A |
| **Maximum Output Voltage** | 480 V |
| **Apparent Power** | 12.1 kVA 480 V normal duty)<br>13.3 kVA 480 V heavy duty) |
| **Maximum Transient Current** | 18.2 A 60 s normal duty)<br>19.1 A 60 s heavy duty)<br>22.3 A 2 s normal duty)<br>22.9 A 2 s heavy duty) |
| **Electrical Connection** | Screw terminal 4...6 mm² DC bus<br>Screw terminal 0.2...2.5 mm² control<br>Screw terminal 1.5...6 mm² line side<br>Screw terminal 1.5...6 mm² motor |
| **Prospective Line Isc** | 22 kA |
| **Base Load Current At High Overload** | 12.7 A |
| **Base Load Current At Low Overload** | 16.5 A |
| **Power Dissipation In W** | Natural convection 134 W 380 V 4 kHz heavy duty)<br>Forced convection 134 W 380 V 4 kHz heavy duty)<br>Natural convection 164 W 380 V 4 kHz normal duty)<br>Forced convection 164 W 380 V 4 kHz normal duty) |
| **Electrical Connection** | DC bus screw terminal 4...6 mm² AWG 12...AWG 10<br>Control screw terminal 0.2...2.5 mm² AWG 24...AWG 12<br>Line side screw terminal 1.5...6 mm² AWG 14...AWG 10<br>Motor screw terminal 1.5...6 mm² AWG 14...AWG 10 |
| **With Safety Function Safely Limited Speed (Sls)** | True |
| **With Safety Function Safe Brake Management (Sbc/Sbt)** | True |
| **With Safety Function Safe Operating Stop (Sos)** | False |
| **With Safety Function Safe Position (Sp)** | False |
| **With Safety Function Safe Programmable Logic** | False |
| **With Safety Function Safe Speed Monitor (Ssm)** | False |
| **With Safety Function Safe Stop 1 (Ss1)** | True |
| **With Sft Fct Safe Stop 2 (Ss2)** | False |
| **With Safety Function Safe Torque Off (Sto)** | True |
| **With Safety Function Safely Limited Position (Slp)** | False |
| **With Safety Function Safe Direction (Sdi)** | False |

| | |
|---|---|
| **Protection Type** | Thermal protection motor<br>Safe torque off motor<br>Motor phase loss motor<br>Thermal protection drive<br>Safe torque off drive<br>Overheating drive<br>Overcurrent drive<br>Output overcurrent between motor phase and earth drive<br>Output overcurrent between motor phases drive<br>Short-circuit between motor phase and earth drive<br>Short-circuit between motor phases drive<br>Motor phase loss drive<br>DC Bus overvoltage drive<br>Line supply overvoltage drive<br>Line supply undervoltage drive<br>Input supply loss drive<br>Exceeding limit speed drive<br>Break on the control circuit drive |
| **Width** | 4.33 in (110.0 mm) |
| **Height** | 10.63 in (270.0 mm) |
| **Depth** | 9.21 in (234.0 mm) |
| **Net Weight** | 6.39 lb(US) (2.9 kg) |
| **Continuous Output Current** | 16.5 A 4 kHz normal duty<br>12.7 A 4 kHz heavy duty |

# Environment

| | |
|---|---|
| **Operating Altitude** | <= 9842.52 ft (3000 m) with current derating above 1000m |
| **Operating Position** | Vertical +/- 10 degree |
| **Product Certifications** | UL<br>CSA<br>TÜV<br>EAC<br>CTick |
| **Marking** | CE |
| **Standards** | IEC 61800-3<br>IEC 61800-5-1<br>IEC 60721-3<br>IEC 61508<br>IEC 13849-1<br>UL 618000-5-1<br>UL 508C |
| **Assembly Style** | With heat sink |
| **Electromagnetic Compatibility** | Electrostatic discharge immunity test level 3 IEC 61000-4-2<br>Radiated radio-frequency electromagnetic field immunity test level 3 IEC 61000-4-3<br>Electrical fast transient/burst immunity test level 4 IEC 61000-4-4<br>1.2/50 µs - 8/20 µs surge immunity test level 3 IEC 61000-4-5<br>Conducted radio-frequency immunity test level 3 IEC 61000-4-6 |
| **Environmental Class (During Operation)** | Class 3C3 according to IEC 60721-3-3<br>Class 3S3 according to IEC 60721-3-3 |
| **Maximum Acceleration Under Shock Impact (During Operation)** | 70 m/s² at 22 ms |
| **Maximum Acceleration Under Vibrational Stress (During Operation)** | 5 m/s² at 9...200 Hz |
| **Maximum Deflection Under Vibratory Load (During Operation)** | 1.5 mm at 2...9 Hz |
| **Permitted Relative Humidity (During Operation)** | Class 3K5 according to EN 60721-3 |
| **Volume Of Cooling Air** | 20077.44 Gal/hr(US) (76.0 m3/h) |
| **Type Of Cooling** | Forced convection |
| **Overvoltage Category** | Class III |

| | |
|---|---|
| **Regulation Loop** | Adjustable PID regulator |
| **Noise Level** | 46.6 dB |
| **Pollution Degree** | 2 |
| **Ambient Air Transport Temperature** | -40…158 °F (-40…70 °C) |
| **Ambient Air Temperature For Operation** | 5…122 °F (-15…50 °C) without derating vertical position)<br>122…140 °F (50…60 °C) with derating factor vertical position) |
| **Ambient Air Temperature For Storage** | -40…158 °F (-40…70 °C) |
| **Isolation** | Between power and control terminals |

## Ordering and shipping details

| | |
|---|---|
| **Category** | US1CP4B22182 |
| **Discount Schedule** | CP4B |
| **Gtin** | 3606480967030 |
| **Returnability** | Yes |
| **Country Of Origin** | US |

## Packing Units

| | |
|---|---|
| **Unit Type Of Package 1** | PCE |
| **Number Of Units In Package 1** | 1 |
| **Package 1 Height** | 5.20 in (13.200 cm) |
| **Package 1 Width** | 14.57 in (37.000 cm) |
| **Package 1 Length** | 12.60 in (32.000 cm) |
| **Package 1 Weight** | 8.40 lb(US) (3.810 kg) |
| **Unit Type Of Package 2** | S06 |
| **Number Of Units In Package 2** | 10 |
| **Package 2 Height** | 29.53 in (75.000 cm) |
| **Package 2 Width** | 23.62 in (60.000 cm) |
| **Package 2 Length** | 31.50 in (80.000 cm) |
| **Package 2 Weight** | 112.22 lb(US) (50.900 kg) |

## Sustainability

**Green Premium™ label** is Schneider Electric's commitment to delivering products with best-in-class environmental performance. Green Premium promises compliance with the latest regulations, transparency on environmental impacts, as well as circular and low-$CO_2$ products.

**Guide to assessing product sustainability** is a white paper that clarifies global eco-label standards and how to interpret environmental declarations.

Learn more about Green Premium >

Guide to assess a product's sustainability >

Transparency RoHS/REACh

## Resource performance

Upgraded Components Available

## Well-being performance

Mercury Free

Rohs Exemption Information Yes

## Certifications & Standards

| | |
|---|---|
| **Reach Regulation** | REACh Declaration |
| **Eu Rohs Directive** | Pro-active compliance (Product out of EU RoHS legal scope) |
| **China Rohs Regulation** | China RoHS declaration |
| **Environmental Disclosure** | Product Environmental Profile |
| **Weee** | The product must be disposed on European Union markets following specific waste collection and never end up in rubbish bins. |
| **Circularity Profile** | End of Life Information |
| **California Proposition 65** | WARNING: This product can expose you to chemicals including: Lead and lead compounds, which is known to the State of California to cause cancer and birth defects or other reproductive harm. For more information go to www.P65Warnings.ca.gov |

Dimensions Drawings

## Dimensions

### Views: Front - Left - Rear

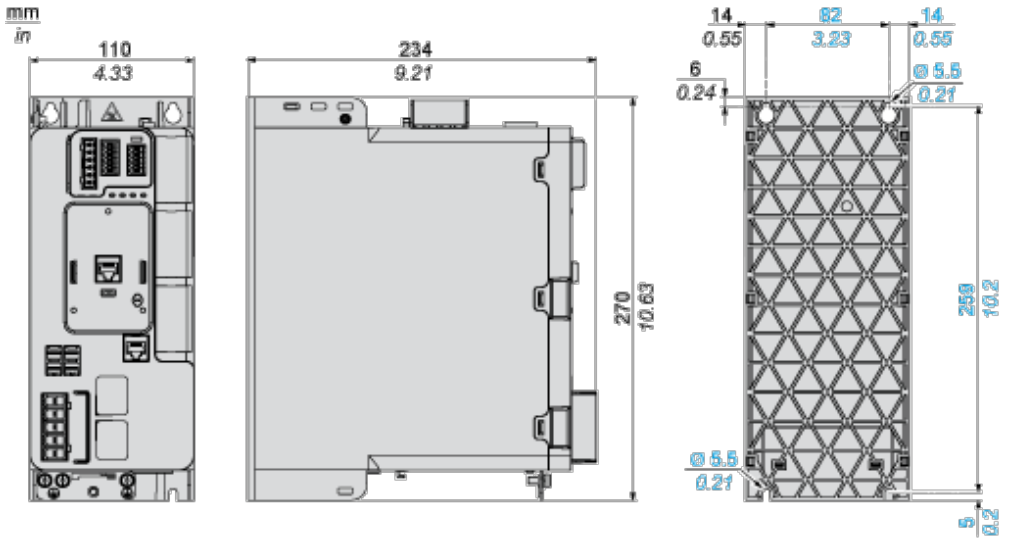

## Mounting and Clearance

### Clearance

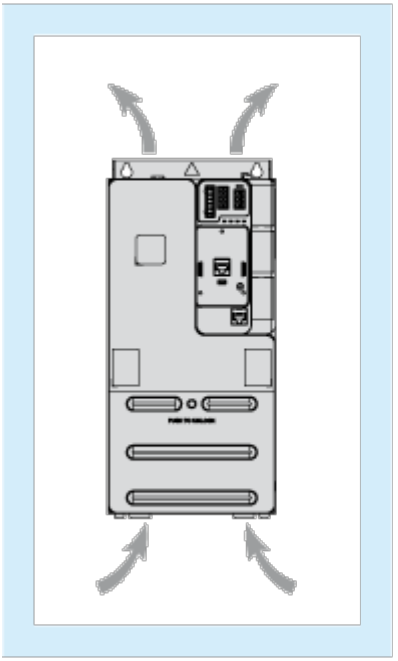

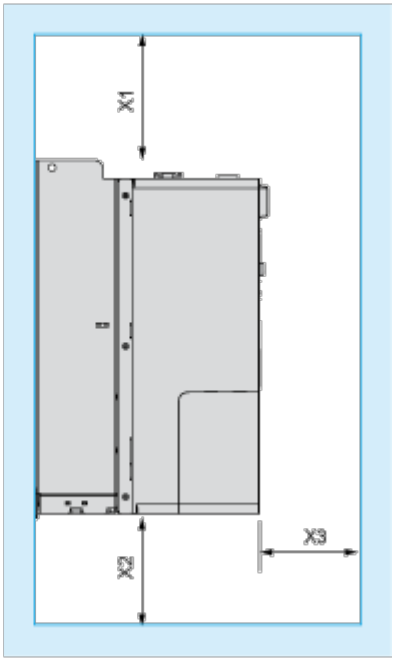


**Dimensions in mm**

| X1 | X2 | X3 |
|---|---|---|
| ≥ 100 | ≥ 100 | ≥ 60 |

**Dimensions in in.**

| X1 | X2 | X3 |
|---|---|---|
| ≥ 3.94 | ≥ 3.94 | ≥ 2.36 |

## Mounting Types

### Mounting Type A: Side by Side IP20

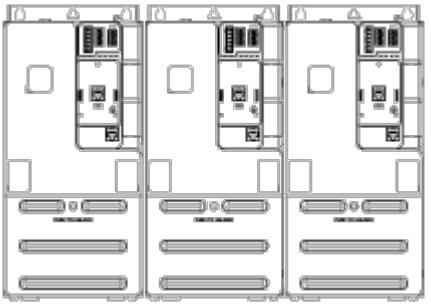

Possible, at ambient temperature ≤ 50 °C (122 °F)

### Mounting Type B: Individual IP20

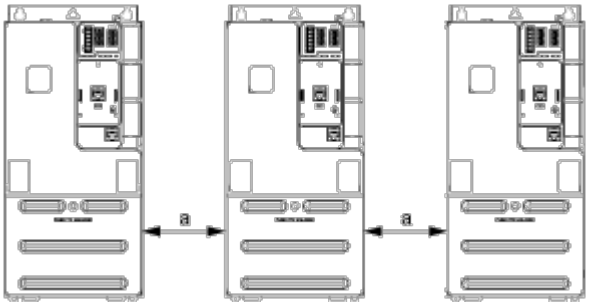


a ≥ 50 mm (1.97 in.) from 50...60°C, no restriction below 50°C

Connections and Schema

## Connections and Schema

### Three-phase Power Supply with Upstream Breaking via Line Contactor Without Safety Function STO

Connection diagrams conforming to standards ISO13849 category 1 and IEC/EN 61508 capacity SIL1, stopping category 0 in accordance with standard IEC/EN 60204-1.

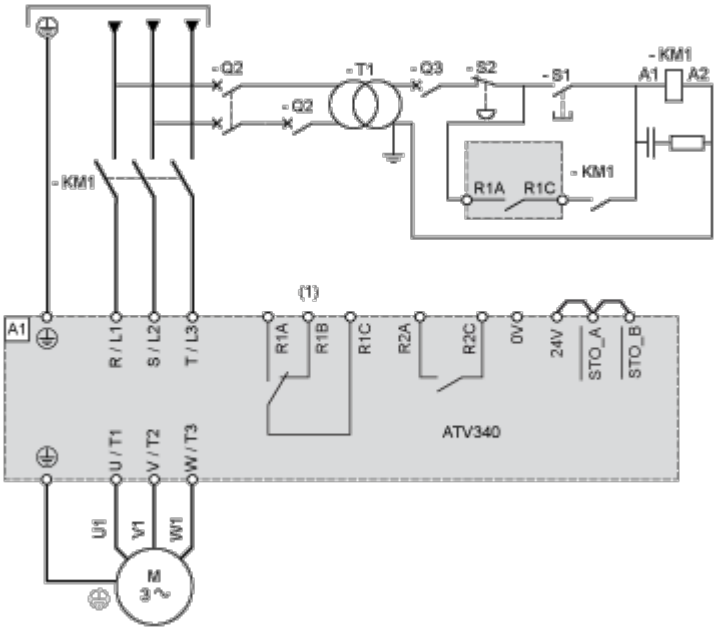


(1) Use relay output R1 set to operating state Fault to switch Off the product once an error is detected.

A1 : Drive

KM1 : Line Contactor

Q2, Q3 : Circuit breakers

S1 : Pushbutton

S2 : Emergency stop

T1 : Transformer for control part

### Three-phase Power Supply With Downstream Breaking via Switch Disconnector

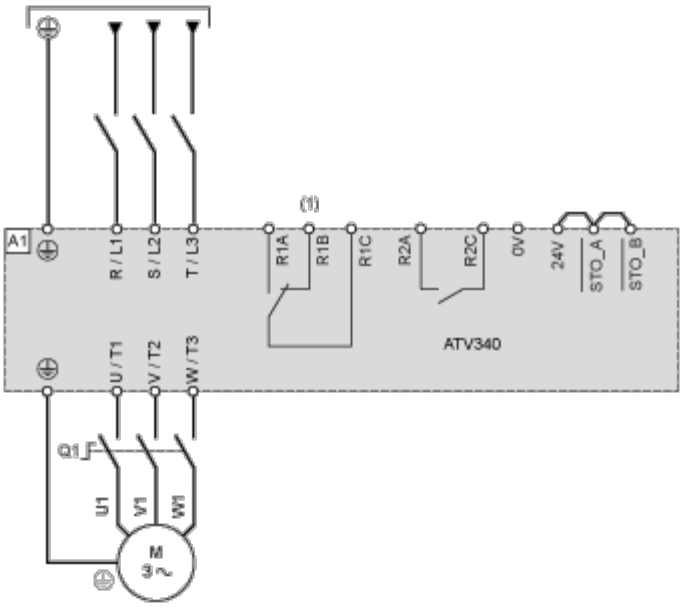


(1) Use relay output R1 set to operating state Fault to switch Off the product once an error is detected.

A1 : Drive

Q1 : Switch disconnector

## Sensor Connection

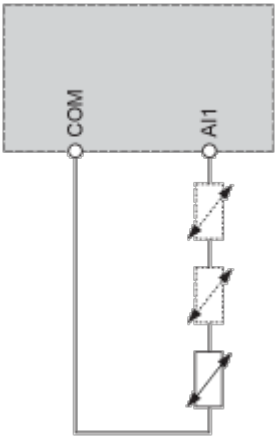


It is possible to connect either 1 or 3 sensors on terminals AI1.

## Control Block Wiring Diagram

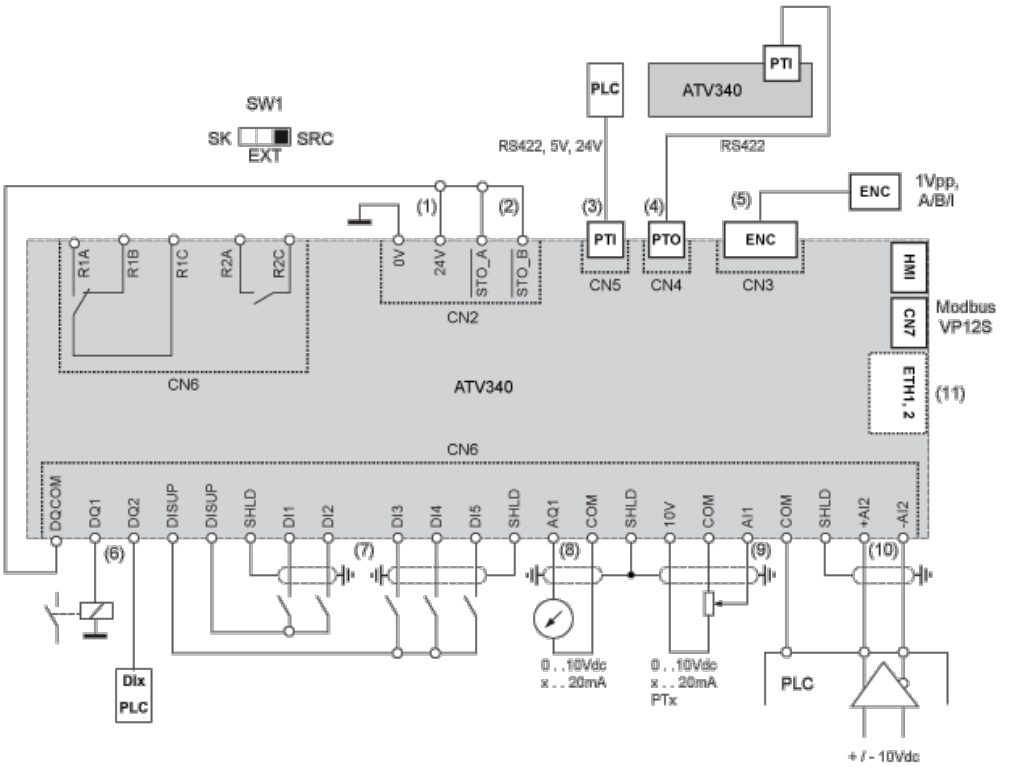


(1) 24V supply (STO)

(2) STO - Safe Torque Off

(3) PTI - Pulse Train In

(4) PTO - Pulse Train Out

(5) Motor Encoder connection

(6) Digital outputs

(7) Digital inputs

(8) Analog output

(9) Analog input

(10) Differential Analog Input

(11) Ethernet port (only on Ethernet drive version)

SW1 : Sink/Source switch

R1A, R1B, R1C : Fault relay

R2A, R2C : Sequence relay

## Digital Inputs Wiring

### Digital Inputs: Internal Supply

**Using DISUP Signal**

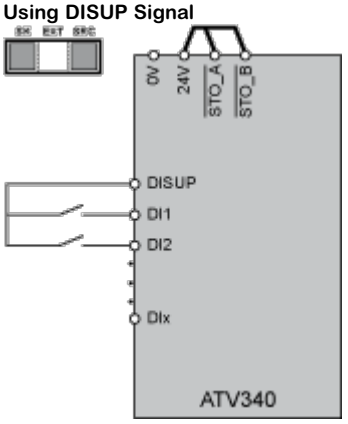


In SRC position DISUP outputs 24 V. In SK position DISUP is connected to 0 V.

### Digital Inputs: External Supply

**Positive Logic, Source, European Style**

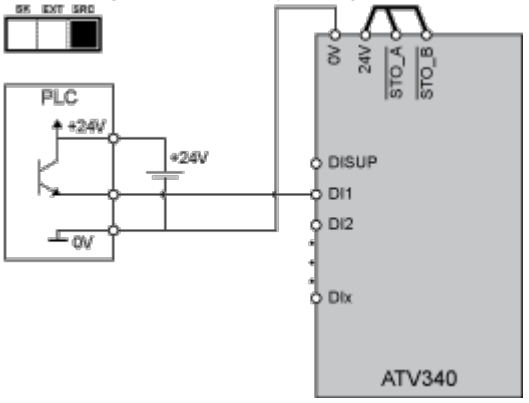


**Negative Logic, Sink, Asian Style**

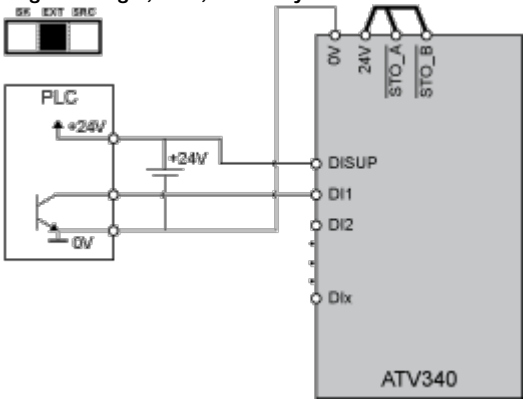


### Digital Inputs: Internal supply

**Negative Logic, Sink, Asian Style**

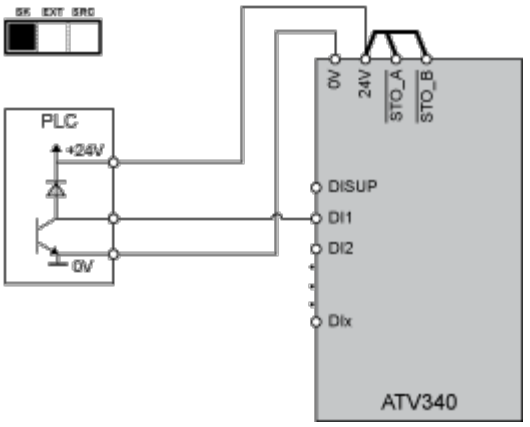
SK EXT SRC
PLC
+24V
0V
0V
24V
STO_A
STO_B
DISUP
DI1
DI2
DIx
ATV340

## Digital Outputs Wiring

### Digital Outputs: Internal Supply

**Positive Logic, Source, European Style, DQCOM to +24V**

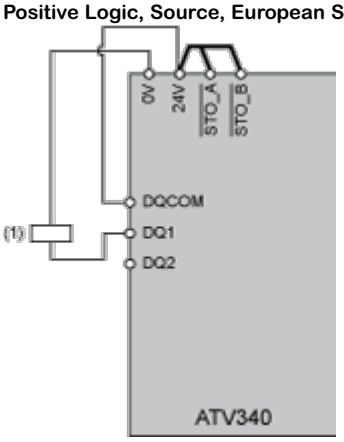


(1) Relay or valve

**Negative Logic, Sink, Asian Style, DQCOM to 0V**

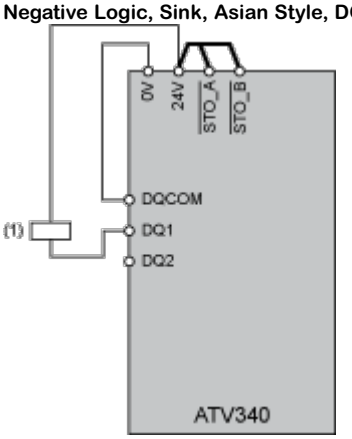


(1) Relay or valve

### Digital Outputs: External Supply

**Positive Logic, Source, European Style, DQCOM to +24V**

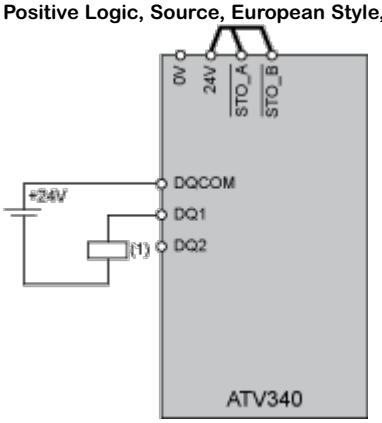


(1) Relay or valve

**Negative Logic, Sink, Asian Style, DQCOM to 0V**

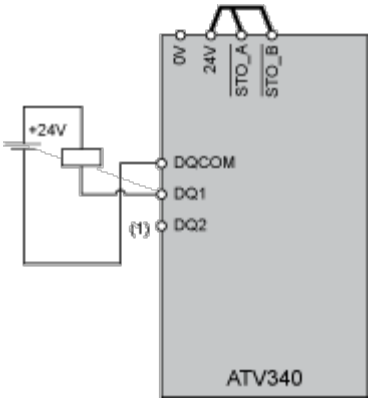


(1) Relay or valve

## Performance Curves

### Open Loop Applications

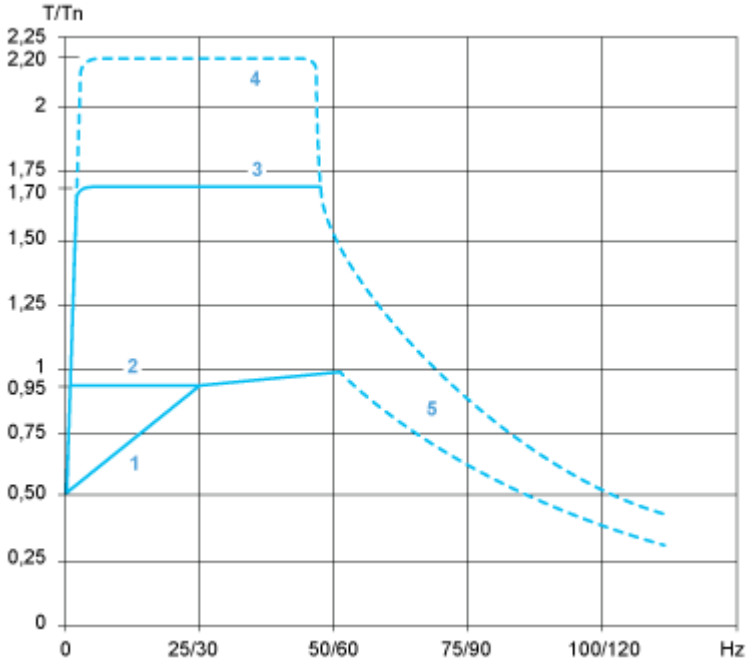


1 : Self-cooled motor: continuous useful torque

2 : Force-cooled motor: continuous useful torque

3 : Overtorque for 60 s maximum

4 : Transient overtorque for 2 s maximum

5 : Torque in overspeed at constant power

## Closed Loop Applications

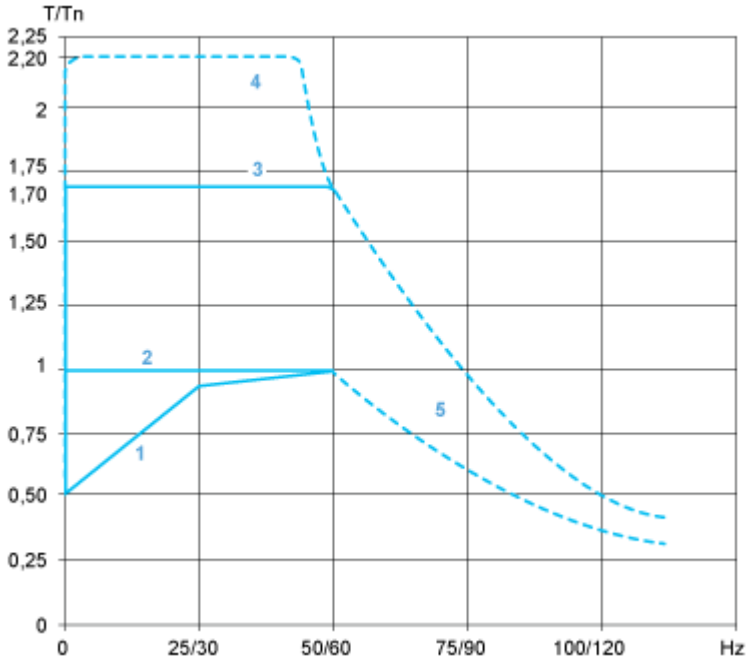


1 : Self-cooled motor: continuous useful torque

2 : Force-cooled motor: continuous useful torque

3 : Overtorque for 60 s maximum

4 : Transient overtorque for 2 s maximum

5 : Torque in overspeed at constant power