Product data sheet

Specifications

Green Premium™

Altivar 61 drive 350hp 400/480 3ph

ATV61HC22N4

Discontinued on: Feb 17, 2021

To be end-of-service on: Dec 31, 2028

Discontinued

Product availability: Non-Stock - Not normally stocked in distribution facility

Main

Range Of Product	Altivar 61
Product Or Component Type	Variable speed drive
Product Specific Application	Pumping and ventilation machine
Component Name	ATV61
Motor Power Kw	200 kW, 3 phase 380...480 V 220 kW, 3 phase 380...480 V
Maximum Horse Power Rating	300 hp, 3 phase 380...480 V 350 hp, 3 phase 380...480 V
Power Supply Voltage	380...480 V - 15...10 %
Supply Number Of Phases	3 phase
Line Current	331 A 480 V 3 phase 200 kW / 300 hp 357 A 380 V 3 phase 200 kW / 300 hp 383 A 480 V 3 phase 220 kW / 350 hp 396 A 380 V 3 phase 220 kW / 350 hp
Emc Filter	Level 3 EMC filter
Assembly Style	With heat sink
Apparent Power	235 kVA 380 V 3 phase 200 kW / 300 hp 260.6 kVA 380 V 3 phase 220 kW / 350 hp
Maximum Prospective Line Isc	50 kA 3 phase
Maximum Transient Current	512.4 A 60 s, 3 phase
Nominal Switching Frequency	2.5 kHz
Switching Frequency	2...8 kHz adjustable 2.5...8 kHz with derating factor
Asynchronous Motor Control	Voltage/frequency ratio, 2 points Flux vector control without sensor, standard Voltage/frequency ratio - Energy Saving, quadratic U/f Voltage/frequency ratio, 5 points
Synchronous Motor Control Profile	Vector control without sensor, standard
Communication Port Protocol	CANopen Modbus
Type Of Polarization	No impedance Modbus

Disclaimer: This documentation is not intended as a substitute for and is not to be used for determining suitability or reliability of these products for specific user applications

Price is “List Price” and may be subject to a trade discount – check with your local distributor or retailer for actual price.

Option Card	Communication card APOGEE FLN Communication card BACnet Communication card CC-Link Controller inside programmable card Communication card DeviceNet Communication card EtherNet/IP Communication card Fipio I/O extension card Communication card Interbus-S Communication card LonWorks Communication card METASYS N2 Communication card Modbus Plus Communication card Modbus TCP Communication card Modbus/Uni-Telway Multi-pump card Communication card Profibus DP Communication card Profibus DP V1

Complementary

Product Destination	Asynchronous motors Synchronous motors
Power Supply Voltage Limits	323…528 V
Power Supply Frequency	50...60 Hz - 5...5 %
Power Supply Frequency Limits	47.5...63 Hz
Continuous Output Current	427 A 2.5 kHz, 380 V - 3 phase 427 A 2.5 kHz, 460 V - 3 phase
Output Frequency	0.1…500 Hz
Speed Range	1…100 in open-loop mode, without speed feedback
Speed Accuracy	+/- 10 % of nominal slip 0.2 Tn to Tn without speed feedback
Torque Accuracy	+/- 15 % in open-loop mode, without speed feedback
Transient Overtorque	130 % of nominal motor torque +/- 10 % 60 s
Braking Torque	<= 125 % with braking resistor 30 % without braking resistor
Regulation Loop	Frequency PI regulator
Motor Slip Compensation	Automatic whatever the load Can be suppressed Not available in voltage/frequency ratio (2 or 5 points) Adjustable
Diagnostic	for drive voltage 1 LED (red)
Output Voltage	<= power supply voltage
Electrical Isolation	Between power and control terminals
Type Of Cable For Mounting In An Enclosure	With an IP21 or an IP31 kit 3 IEC cable 104 °F (40 °C), copper 70 °C / PVC With UL Type 1 kit 3 UL 508 cable 104 °F (40 °C), copper 75 °C / PVC Without mounting kit 1 IEC cable 113 °F (45 °C), copper 70 °C / PVC Without mounting kit 1 IEC cable 113 °F (45 °C), copper 90 °C / XLPE/EPR
Electrical Connection	Terminal 2.5 mm² / AWG 14 AI1-/AI1+, AI2, AO1, R1A, R1B, R1C, R2A, R2B, LI1...LI6, PWR) Terminal 120 mm² / 250 kcmil PA, PB) Terminal 2 x 150 mm² / 2 x 350 kcmil L1/R, L2/S, L3/T, U/T1, V/T2, W/T3) Terminal 2 x 150 mm² / 2 x 350 kcmil PC/-, PO, PA/+)
Tightening Torque	5.31 lbf.in (0.6 N.m) AI1-/AI1+, AI2, AO1, R1A, R1B, R1C, R2A, R2B, LI1...LI6, PWR) 362.88 lbf.in (41 N.m), 360 lb.in PC/-, PO, PA/+) 212.42 lbf.in (24 N.m), 212 lb.in PA, PB) 362.88 lbf.in (41 N.m), 360 lb.in L1/R, L2/S, L3/T, U/T1, V/T2, W/T3)
Supply	Internal supply for reference potentiometer (1 to 10 kOhm) 10.5 V DC, +/- 5 %, <10 mA overload and short-circuit protection Internal supply 24 V DC 21…27 V), <200 mA overload and short-circuit protection External supply 24 V DC 19…30 V)

Analogue Input Number	2
Analogue Input Type	AI1-/AI1+ bipolar differential voltage +/- 10 V DC 24 V max 11 bits + sign AI2 software-configurable current 0...20 mA 242 Ohm 11 bits AI2 software-configurable voltage 0...10 V DC 24 V max 30000 Ohm 11 bits
Sampling Time	2 ms +/- 0.5 ms AI1-/AI1+) - analog input 2 ms +/- 0.5 ms AI2) - analog input 2 ms +/- 0.5 ms AO1) - analog output 2 ms +/- 0.5 ms LI1...LI5) - discrete input 2 ms +/- 0.5 ms LI6)if configured as logic input - discrete input
Absolute Accuracy Precision	+/- 0.6 % AI1-/AI1+) for a temperature variation 60 °C +/- 0.6 % AI2) for a temperature variation 60 °C +/- 1 % AO1) for a temperature variation 60 °C
Linearity Error	+/- 0.15 % of maximum value AI1-/AI1+) +/- 0.15 % of maximum value AI2) +/- 0.2 % AO1)
Analogue Output Number	1
Analogue Output Type	AO1 software-configurable current 0...20 mA 500 Ohm 10 bits AO1 software-configurable voltage 0...10 V DC 470 Ohm 10 bits AO1 software-configurable logic output 10 V, 20 mA
Discrete Output Number	2
Discrete Output Type	Configurable relay logic R1A, R1B, R1C) NO/NC - 100000 cycles Configurable relay logic R2A, R2B) NO - 100000 cycles
Maximum Response Time	<= 100 ms in STO (Safe Torque Off) R1A, R1B, R1C <= 7 ms +/- 0.5 ms R2A, R2B <= 7 ms +/- 0.5 ms
Minimum Switching Current	3 mA 24 V DC configurable relay logic
Maximum Switching Current	R1, R2 2 A 250 V AC inductive, cos phi = 0.4 7 ms R1, R2 2 A 30 V DC inductive, cos phi = 0.4 7 ms R1, R2 5 A 250 V AC resistive, cos phi = 1 0 ms R1, R2 5 A 30 V DC resistive, cos phi = 1 0 ms
Discrete Input Number	7
Discrete Input Type	Programmable LI1...LI5) 24 V DC <= 30 V)level 1 PLC - 3500 Ohm Switch-configurable LI6) 24 V DC <= 30 V)level 1 PLC - 3500 Ohm Switch-configurable PTC probe LI6)0…6 - 1500 Ohm Safety input PWR) 24 V DC <= 30 V) - 1500 Ohm
Discrete Input Logic	Negative logic (sink) LI1...LI5), > 16 V, < 10 V Positive logic (source) LI1...LI5), < 5 V, > 11 V Negative logic (sink) LI6)if configured as logic input, > 16 V, < 10 V Positive logic (source) LI6)if configured as logic input, < 5 V, > 11 V
Acceleration And Deceleration Ramps	Automatic adaptation of ramp if braking capacity exceeded, by using resistor S, U or customized Linear adjustable separately from 0.01 to 9000 s
Braking To Standstill	By DC injection
Protection Type	Against exceeding limit speed drive Against input phase loss drive Break on the control circuit drive Input phase breaks drive Line supply overvoltage drive Line supply undervoltage drive Overcurrent between output phases and earth drive Overheating protection drive Overvoltages on the DC bus drive Power removal drive Short-circuit between motor phases drive Thermal protection drive Motor phase break motor Power removal motor Thermal protection motor
Insulation Resistance	> 1 mOhm 500 V DC for 1 minute to earth
Frequency Resolution	Analog input 0.024/50 Hz Display unit 0.1 Hz

Connector Type	1 RJ45 on front face)Modbus 1 RJ45 on terminal)Modbus Male SUB-D 9 on RJ45CANopen
Physical Interface	2-wire RS 485 Modbus
Transmission Frame	RTU Modbus
Transmission Rate	4800 bps, 9600 bps, 19200 bps, 38.4 Kbps Modbus on terminal 9600 bps, 19200 bps Modbus on front face 20 kbps, 50 kbps, 125 kbps, 250 kbps, 500 kbps, 1 Mbps CANopen
Data Format	8 bits, 1 stop, even parity Modbus on front face 8 bits, odd even or no configurable parity Modbus on terminal
Number Of Addresses	1…127 CANopen 1…247 Modbus
Method Of Access	Slave CANopen
Marking	CE
Operating Position	Vertical +/- 10 degree
Net Weight	242.51 lb(US) (110 kg)
Width	17.32 in (440 mm)
Height	46.85 in (1190 mm)
Depth	14.84 in (377 mm)

Environment

Noise Level	66 dB 86/188/EEC
Dielectric Strength	3535 V DC between earth and power terminals 5092 V DC between control and power terminals
Electromagnetic Compatibility	Conducted radio-frequency immunity test level 3 IEC 61000-4-6 Electrical fast transient/burst immunity test level 4 IEC 61000-4-4 Electrostatic discharge immunity test level 3 IEC 61000-4-2 Radiated radio-frequency electromagnetic field immunity test level 3 IEC 61000-4-3 Voltage dips and interruptions immunity test IEC 61000-4-11
Standards	EN/IEC 61800-3 IEC 60721-3-3 class 3C2 EN 61800-3 environments 2 category C3 EN 55011 class A group 2 EN 61800-3 environments 1 category C3 UL Type 1 EN/IEC 61800-5-1
Product Certifications	GOST CSA UL NOM 117 C-tick DNV
Pollution Degree	3 EN/IEC 61800-5-1 3 UL 840
Degree Of Proctection	IP41 on upper part EN/IEC 60529 IP41 on upper part EN/IEC 61800-5-1 IP54 on lower part EN/IEC 60529 IP54 on lower part EN/IEC 61800-5-1 IP00 EN/IEC 60529 IP00 EN/IEC 61800-5-1 IP30 on side parts EN/IEC 60529 IP30 on side parts EN/IEC 61800-5-1 IP30 on the front panel EN/IEC 60529 IP30 on the front panel EN/IEC 61800-5-1
Vibration Resistance	0.6 gn 10…200 Hz)EN/IEC 60068-2-6 1.5 mm peak to peak 3…10 Hz)EN/IEC 60068-2-6
Shock Resistance	4 gn 11 ms EN/IEC 60068-2-27

Relative Humidity	5…95 % without condensation IEC 60068-2-3 5…95 % without dripping water IEC 60068-2-3
Ambient Air Temperature For Operation	14…113 °F (-10…45 °C) without derating) 113…140 °F (45…60 °C) with derating factor)
Ambient Air Temperature For Storage	-13…158 °F (-25…70 °C)
Operating Altitude	<= 3280.84 ft (1000 m) without derating 3280.84...9842.52 ft (1000...3000 m) with current derating 1 % per 100 m

Ordering and shipping details

Category	US1CP4C22139
Discount Schedule	CP4C
Gtin	3389118086418
Returnability	No
Country Of Origin	IN

Packing Units

Unit Type Of Package 1	PCE
Number Of Units In Package 1	1
Package 1 Height	15.16 in (38.5 cm)
Package 1 Width	50.59 in (128.5 cm)
Package 1 Length	18.74 in (47.6 cm)
Package 1 Weight	339.51 lb(US) (154.0 kg)
Unit Type Of Package 2	PAL
Number Of Units In Package 2	1
Package 2 Height	21.06 in (53.5 cm)
Package 2 Width	50.59 in (128.5 cm)
Package 2 Length	18.74 in (47.6 cm)
Package 2 Weight	394.63 lb(US) (179.0 kg)

Contractual warranty

Warranty	18 months

Sustainability

Green Premium™ label is Schneider Electric's commitment to delivering products with best-in-class environmental performance. Green Premium promises compliance with the latest regulations, transparency on environmental impacts, as well as circular and low-CO_2 products.

Guide to assessing product sustainability is a white paper that clarifies global eco-label standards and how to interpret environmental declarations.

Learn more about Green Premium >

Guide to assess a product's sustainability >

RoHS/REACh

Well-being performance

Mercury Free

Rohs Exemption Information	Yes

Certifications & Standards

Eu Rohs Directive	Pro-active compliance (Product out of EU RoHS legal scope) EU RoHS Declaration
China Rohs Regulation	China RoHS declaration
Weee	The product must be disposed on European Union markets following specific waste collection and never end up in rubbish bins.
California Proposition 65	WARNING: This product can expose you to chemicals including: Lead and lead compounds, which is known to the State of California to cause cancer and birth defects or other reproductive harm. For more information go to www.P65Warnings.ca.gov

Dimensions Drawings

UL Type 1/IP 20 Drives

Dimensions with or without 1 Option Card (1)

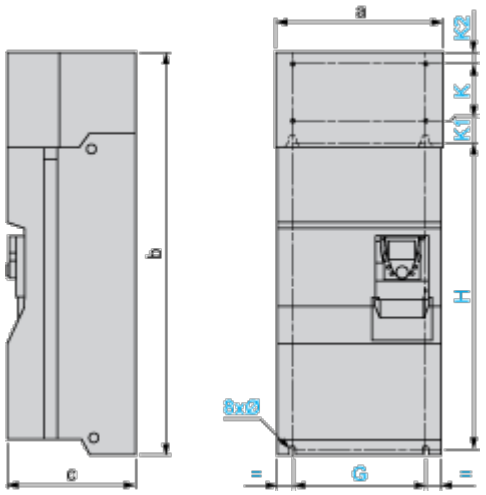

Dimensions in mm

a	b	c	G	H	K	K1	K2	Ø
440	1190	377	350	920	150	75	30	11.5

Dimensions in in.

a	b	c	G	H	K	K1	K2	Ø
17.32	46.85	14.84	13.78	36.22	5.90	2.95	1.18	0.45

(1) Option cards: I/O extension cards, communication cards or "Controller Inside" programmable card.

Dimensions with 2 Option Cards (1)

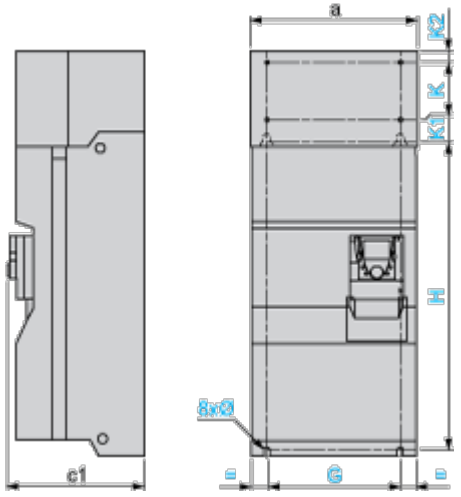

Dimensions in mm

a	c1	G	H	K	K1	K2	Ø
440	392	350	920	150	75	30	11.5

Dimensions in in.

a	c1	G	H	K	K1	K2	Ø
17.32	15.43	13.78	36.22	5.90	2.95	1.18	0.45

(1) Option cards: I/O extension cards, communication cards or "Controller Inside" programmable card.

Mounting and Clearance

Mounting Recommendations

Clearance

mm
in.

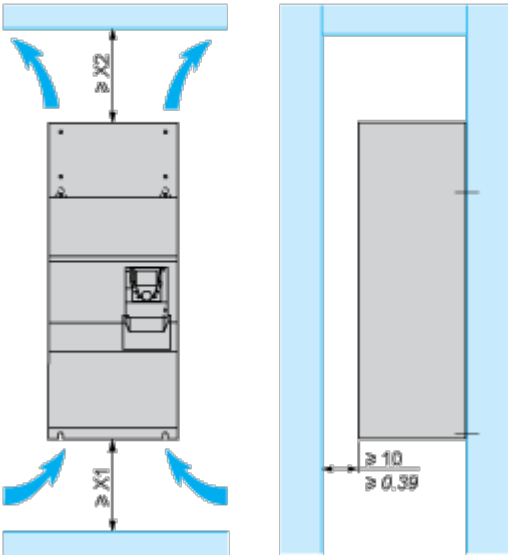

X1 in mm	X2 in mm	X1 in in.	X2 in in.
150	150	5.91	5.91

These drives can be mounted side by side, observing the following mounting recommendations:

mm
in.

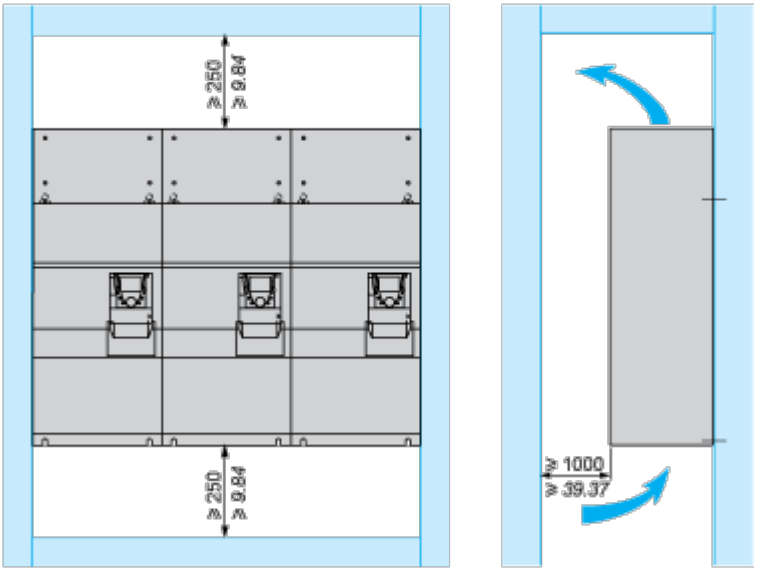

Specific Recommendations for Mounting the Drive in an Enclosure

Ventilation

To ensure proper air circulation in the drive:

- Fit ventilation grilles.
- Ensure that there is sufficient ventilation. If there is not, install a forced ventilation unit with a filter. The openings and/or fans must provide a flow rate at least equal to that of the drive fans (refer to the product characteristics).

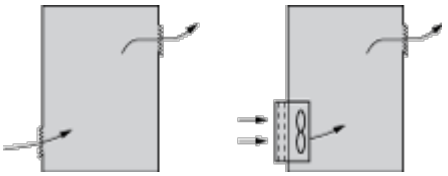

- Use special filters with IP 54 protection.
- Remove the blanking cover from the top of the drive.

Dust and Damp Proof Metal Enclosure (IP 54)

The drive must be mounted in a dust and damp proof enclosure in certain environmental conditions: dust, corrosive gases, high humidity with risk of condensation and dripping water, splashing liquid, etc.
This enables the drive to be used in an enclosure where the maximum internal temperature reaches 50°C.

Connections and Schema

Wiring Diagram Conforming to Standards EN 954-1 Category 1, IEC/EN 61508 Capacity SIL1, in Stopping Category 0 According to IEC/EN 60204-1

Three-Phase Power Supply with Upstream Breaking via Contactor

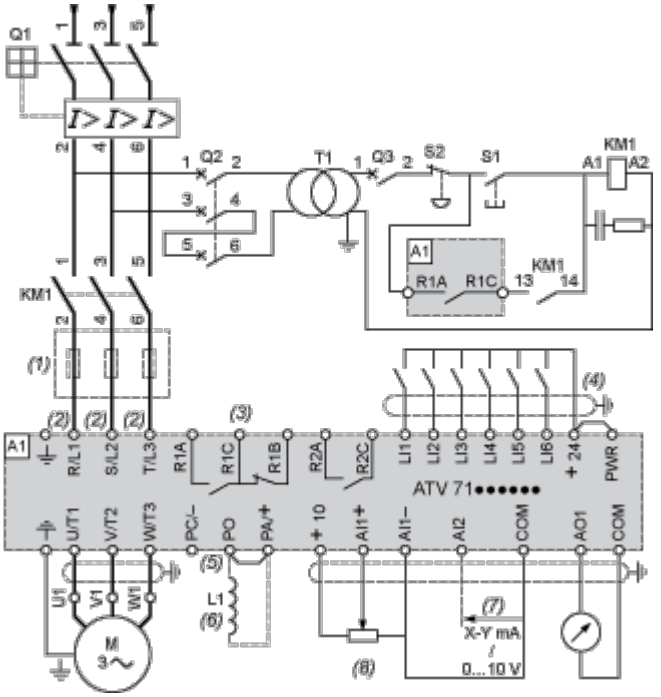

A1 ATV61 drive

KM1 Contactor

L1 DC choke

Q1 Circuit-breaker

Q2 GV2 L rated at twice the nominal primary current of T1

Q3 GB2CB05

S1, S2 XB4 B or XB5 A pushbuttons

T1 100 VA transformer 220 V secondary

(1) Line choke (three-phase); mandatory for ATV61HC11Y…HC80Y drives (except when a special transformer is used (12-pulse)).

(2) For ATV61HC50N4, ATV61HC63N4 and ATV61HC50Y…HC80Y drives, refer to the power terminal connections diagram.

(3) Fault relay contacts. Used for remote signalling of the drive status.

(4) Connection of the common for the logic inputs depends on the positioning of the SW1 switch. The above diagram shows the internal power supply switched to the “source” position (for other connection types, refer to the user guide).

(5) There is no PO terminal on ATV61HC11Y…HC80Y drives.

(6) Optional DC choke for ATV61H•••M3, ATV61HD11M3X…HD45M3X and ATV61H075N4…HD75N4 drives. Connected in place of the strap between the PO and PA/+ terminals. For ATV61HD55M3X…HD90M3X, ATV61HD90N4…HC63N4 drives, the choke is supplied with the drive; the customer is responsible for connecting it. For ATV61W•••N4 and ATV61W•••N4C drives, the DC choke is integrated.

(7) Software-configurable current (0…20 mA) or voltage (0…10 V) analog input.

(8) Reference potentiometer.

NOTE: All terminals are located at the bottom of the drive. Fit interference suppressors on all inductive circuits near the drive or connected on the same circuit, such as relays, contactors, solenoid valves, fluorescent lighting, etc.

Wiring Diagram Conforming to Standards EN 954-1 Category 1, IEC/EN 61508 Capacity SIL1, in Stopping Category 0 According to IEC/EN 60204-1

Three-Phase Power Supply with Downstream Breaking via Switch Disconnector

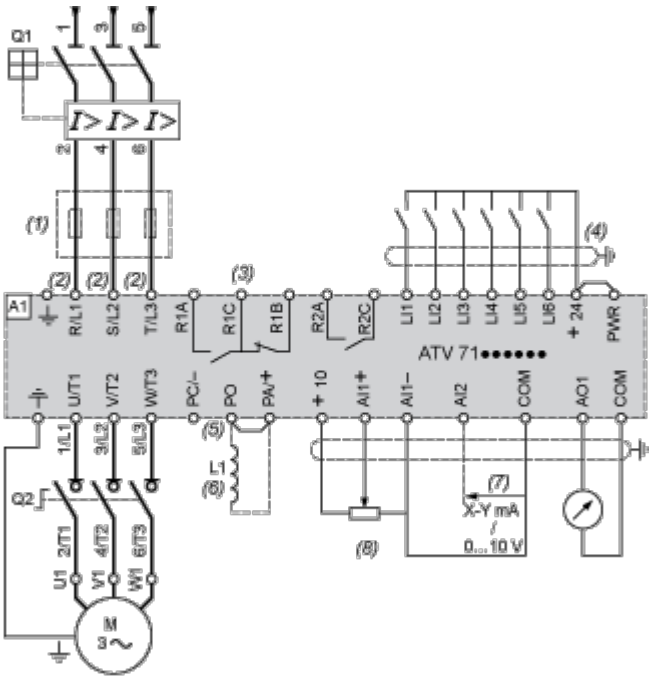

A1 ATV61 drive

L1 DC choke

Q1 Circuit-breaker

Q2 Switch disconnector (Vario)

(1) Line choke (three-phase), mandatory for ATV61HC11Y…HC80Y drives (except when a special transformer is used (12-pulse)).

(2) For ATV61HC50N4, ATV61HC63N4 and ATV61HC50Y…HC80Y drives, refer to the power terminal connections diagram.

(3) Fault relay contacts. Used for remote signalling of the drive status.

(4) Connection of the common for the logic inputs depends on the positioning of the SW1 switch. The above diagram shows the internal power supply switched to the “source” position (for other connection types, refer to the user guide).

(5) There is no PO terminal on ATV61HC11Y…HC80Y drives.

(6) Optional DC choke for ATV61H•••M3, ATV61HD11M3X…HD45M3X and ATV61H075N4…HD75N4 drives. Connected in place of the strap between the PO and PA/+ terminals. For ATV61HD55M3X…HD90M3X, ATV61HD90N4…HC63N4 drives, the choke is supplied with the drive; the customer is responsible for connecting it. For ATV61W•••N4 and ATV61W•••N4C drives, the DC choke is integrated.

(7) Software-configurable current (0…20 mA) or voltage (0…10 V) analog input.

(8) Reference potentiometer.

NOTE: All terminals are located at the bottom of the drive. Fit interference suppressors on all inductive circuits near the drive or connected on the same circuit, such as relays, contactors, solenoid valves, fluorescent lighting, etc.

Wiring Diagram Conforming to Standards EN 954-1 Category 3, IEC/EN 61508 Capacity SIL2, in Stopping Category 0 According to IEC/EN 60204-1

Three-Phase Power Supply, Low Inertia Machine, Vertical Movement

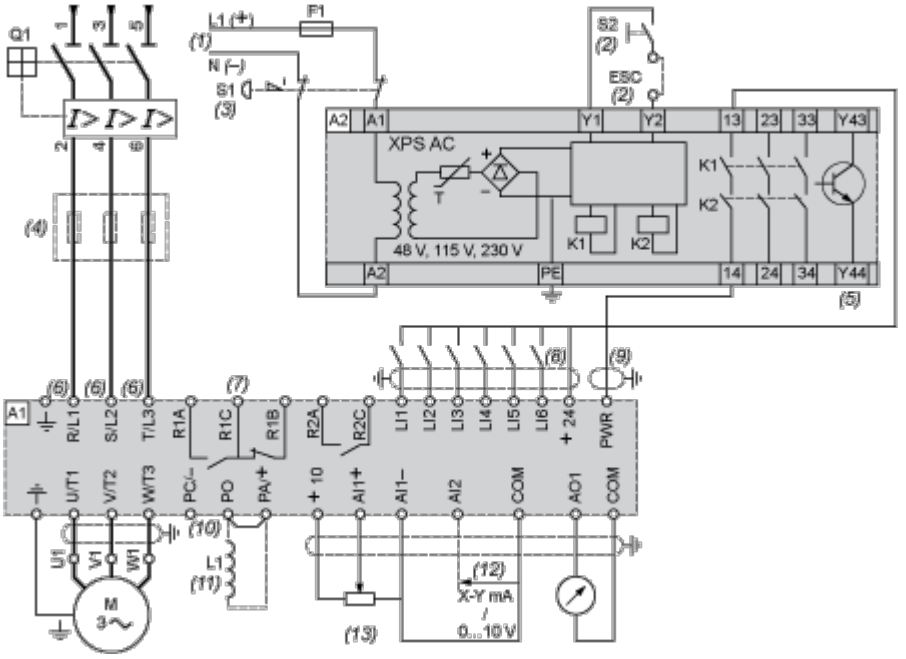

A1 ATV61 drive

A2 Preventa XPS AC safety module for monitoring emergency stops and switches. One safety module can manage the “Power Removal” function for several drives on the same machine. In this case, each drive must connect its PWR terminal to its + 24 V via the safety contacts on the XPS AC module. These contacts are independent for each drive.

F1 Fuse

L1 DC choke

Q1 Circuit-breaker

S1 Emergency stop button with 2 contacts

S2 XB4 B or XB5 A pushbutton

(1) Power supply: 24 Vdc or Vac, 115 Vac, 230 Vac.

(2) S2: resets XPS AC module on power-up or after an emergency stop. ESC can be used to set external starting conditions.

(3) Requests freewheel stopping of the movement and activates the “Power Removal” safety function.

(4) Line choke (three-phase), mandatory for and ATV61HC11Y…HC80Y drives (except when a special transformer is used (12-pulse)).

(5) The logic output can be used to signal that the machine is in a safe stop state.

(6) For ATV61HC50N4, ATV61HC63N4 and ATV61HC50Y…HC80Y drives, refer to the power terminal connections diagram.

(7) Fault relay contacts. Used for remote signalling of the drive status.

(8) Connection of the common for the logic inputs depends on the positioning of the SW1 switch. The above diagram shows the internal power supply switched to the “source” position (for other connection types, refer to the user guide).

(9) Standardized coaxial cable, type RG174/U according to MIL-C17 or KX3B according to NF C 93-550, external diameter 2.54 mm /0.09 in., maximum length 15 m / 49.21 ft. The cable shielding must be earthed.

(10) There is no PO terminal on ATV61HC11Y…HC80Y drives.

(11) Optional DC choke for ATV61H•••M3, ATV61HD11M3X…HD45M3X and ATV61H075N4…HD75N4 drives. Connected in place of the strap between the PO and PA/+ terminals. For ATV61HD55M3X…HD90M3X,

ATV61HD90N4…HC63N4 drives, the choke is supplied with the drive; the customer is responsible for connecting it. For ATV61W•••N4 and ATV61W•••N4C drives, the DC choke is integrated.

(12) Software-configurable current (0…20 mA) or voltage (0…10 V) analog input.

(13) Reference potentiometer.

NOTE: All terminals are located at the bottom of the drive. Fit interference suppressors on all inductive circuits near the drive or connected on the same circuit, such as relays, contactors, solenoid valves, fluorescent lighting, etc.

Wiring Diagram Conforming to Standards EN 954-1 Category 3, IEC/EN 61508 Capacity SIL2, in Stopping Category 1 According to IEC/EN 60204-1

Three-Phase Power Supply, High Inertia Machine

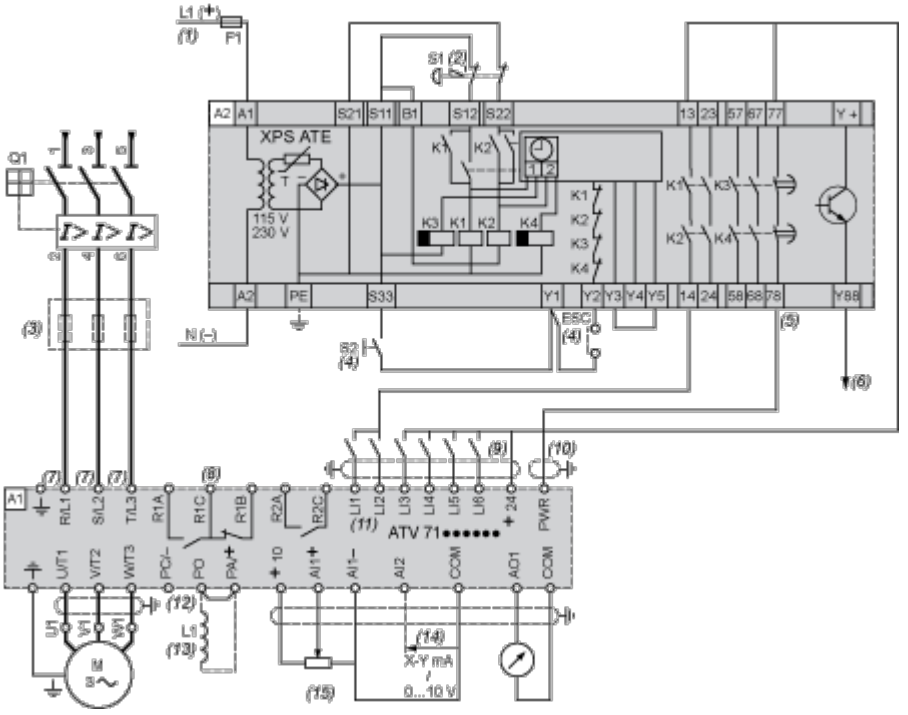

A1 ATV61 drive

A2 (5) Preventa XPS ATE safety module for monitoring emergency stops and switches. One safety module can manage the "Power Removal" safety function for several drives on the same machine. In this case the time delay must be adjusted on the drive controlling the motor that requires the longest stopping time. In addition, each drive must connect its PWR terminal to its + 24 V via the safety contacts on the XPS ATE module. These contacts are independent for each drive.

F1 Fuse

L1 DC choke

Q1 Circuit-breaker

S1 Emergency stop button with 2 contacts

S2 XB4 B or XB5 A pushbutton

(1) Power supply: 24 Vdc or Vac, 115 Vac, 230 Vac.

(2) Requests controlled stopping of the movement and activates the “Power Removal” safety function.

(3) Line choke (three-phase), mandatory for ATV61HC11Y…HC80Y drives (except when a special transformer is used (12-pulse)).

(4) S2: resets XPS ATE module on power-up or after an emergency stop. ESC can be used to set external starting conditions.

(5) The logic output can be used to signal that the machine is in a safe state.

(6) For stopping times requiring more than 30 seconds in category 1, use a Preventa XPS AV safety module which can provide a maximum time delay of 300 seconds.

(7) For ATV61HC50N4, ATV61HC63N4 and ATV61HC50Y…HC80Y drives, refer to the power terminal connections diagram.

(8) Fault relay contacts. Used for remote signalling of the drive status.

(9) Connection of the common for the logic inputs depends on the positioning of the SW1 switch. The above diagram shows the internal power supply switched to the “source” position (for other connection types, refer to the user guide).

(10) Standardized coaxial cable, type RG174/U according to MIL-C17 or KX3B according to NF C 93-550, external diameter 2.54 mm/0.09 in., maximum length 15 m/49.21 ft. The cable shielding must be earthed.

(11) Logic inputs LI1 and LI2 must be assigned to the direction of rotation: LI1 in the forward direction and LI2 in the reverse direction.

(12) There is no PO terminal on ATV61HC11Y…HC80Y drives.

(13) Optional DC choke for ATV61H•••M3, ATV61HD11M3X…HD45M3X and ATV61H075N4…HD75N4 drives. Connected in place of the strap between the PO and PA/+ terminals. For ATV61HD55M3X…HD90M3X, ATV61HD90N4…HC63N4 drives, the choke is supplied with the drive; the customer is responsible for connecting it. For ATV61W•••N4 and ATV61W•••N4C drives, the DC choke is integrated.

(14) Software-configurable current (0…20 mA) or voltage (0…10 V) analog input.

(15) Reference potentiometer.

NOTE: All terminals are located at the bottom of the drive. Fit interference suppressors on all inductive circuits near the drive or connected on the same circuit, such as relays, contactors, solenoid valves, fluorescent lighting, etc.

Performance Curves

Derating Curves

The derating curves for the drive nominal current (In) depend on the temperature and the switching frequency. For intermediate temperatures (e.g. 55°C), interpolate between 2 curves.

Drive combined with a 200 kW motor

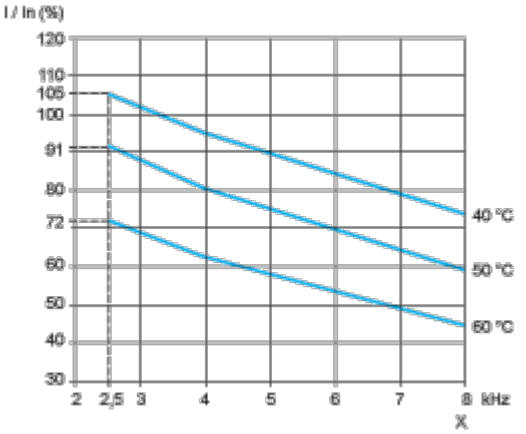

X Switching frequency

Drive combined with a 220 kW motor

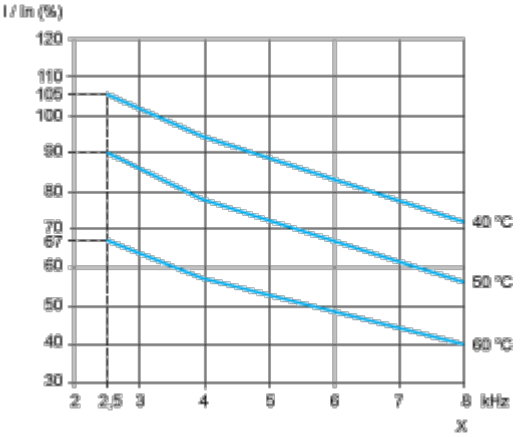

X Switching frequency