Product data sheet

Specifications

modular smart relay, Zelio Logic SR2 SR3, 10 IO, 24V DC, clock, display, 4 transistor outputs

SR3B102BD

Product availability: Non-Stock - Not normally stocked in distribution facility

Price*: 272.00 USD

Main

Range Of Product	Zelio Logic
Product Or Component Type	Modular smart relay

Complementary

Local Display	With
Number Or Control Scheme Lines	0…500 FBD 0…240 ladder
Cycle Time	6…90 ms
Backup Time	10 years 77 °F (25 °C)
Clock Drift	12 min/year 32…131 °F (0…55 °C) 6 s/month 77 °F (25 °C)
Checks	Program memory on each power up
[Us] Rated Supply Voltage	24 V
Supply Voltage Limits	19.2…30 V
Maximum Supply Current	160 mA with extensions) 50 mA without extension)
Power Dissipation In W	4 W without extension 8 W with extensions
Reverse Polarity Protection	With
Discrete Input Number	6 IEC 61131-2 Type 1
Discrete Input Type	Resistive
Discrete Input Voltage	24 V DC
Discrete Input Current	4 mA
Counting Frequency	1 kHz discrete input
Voltage State 1 Guaranteed	>= 15 V I1...IA and IH...IR discrete input circuit >= 15 V IB...IG used as discrete input circuit
Voltage State 0 Guaranteed	<= 5 V I1...IA and IH...IR discrete input circuit <= 5 V IB...IG used as discrete input circuit
Current State 1 Guaranteed	>= 1.2 mA IB...IG used as discrete input circuit) >= 2.2 mA I1...IA and IH...IR discrete input circuit)
Current State 0 Guaranteed	<= 0.5 mA IB...IG used as discrete input circuit) <= 0.75 mA I1...IA and IH...IR discrete input circuit)
Input Compatibility	3-wire proximity sensors PNP discrete input
Analogue Input Number	4

Price is “List Price” and may be subject to a trade discount – check with your local distributor or retailer for actual price.

Disclaimer: This documentation is not intended as a substitute for and is not to be used for determining suitability or reliability of these products for specific user applications

Analogue Input Type	Common mode
Analogue Input Range	0...10 V 0...24 V
Temperature Probe Type	NTC 10k 77 °F (25 °C) NTC 1000k 77 °F (25 °C) KTY81 210/220/221/222/250 Pt 500
Maximum Permissible Voltage	30 V analogue input circuit
Analogue Input Resolution	8 bits
Lsb Value	39 mV analogue input circuit
Conversion Time	Smart relay cycle time analogue input circuit
Conversion Error	+/- 5 % 77 °F (25 °C) analogue input circuit +/- 6.2 % 131 °F (55 °C) analogue input circuit
Repeat Accuracy	+/- 2 % 131 °F (55 °C) analogue input circuit
Operating Distance	10 m between stations, with screened cable (sensor not isolated) analogue input circuit
Input Impedance	12 kOhm IB...IG used as analogue input circuit 12 kOhm IB...IG used as discrete input circuit 7.4 kOhm I1...IA and IH...IR discrete input circuit
Number Of Outputs	4 transistor
Output Voltage	24 V transistor output
Output Voltage Limits	19.2...30 V DC transistor output)
Load Current	0.5…0.625 A transistor output
[Ures] Residual Voltage	2 V at state 1 transistor output
Overload Protection	With transistor output
Short-Circuit Protection	With transistor output
Overvoltage Protection	With transistor output
Clock	With
Response Time	<= 1 ms from state 0 to state 1)transistor output <= 1 ms from state 1 to state 0)transistor output
Connections - Terminals	Screw terminals, 1 x 0.2...1 x 2.5 mm² AWG 25...AWG 14) semi-solid Screw terminals, 1 x 0.2...1 x 2.5 mm² AWG 25...AWG 14) solid Screw terminals, 1 x 0.25...1 x 2.5 mm² AWG 24...AWG 14) flexible with cable end Screw terminals, 2 x 0.2...2 x 1.5 mm² AWG 24...AWG 16) solid Screw terminals, 2 x 0.25...2 x 0.75 mm² AWG 24...AWG 18) flexible with cable end
Tightening Torque	4.43 lbf.in (0.5 N.m)
Overvoltage Category	III IEC 60664-1
Net Weight	0.49 lb(US) (0.22 kg)

Environment

Immunity To Microbreaks	1 ms
Product Certifications	GL C-tick GOST UL CSA

Standards	IEC 60068-2-27 Ea IEC 60068-2-6 Fc IEC 61000-4-6 level 3 IEC 61000-4-4 level 3 IEC 61000-4-2 level 3 IEC 61000-4-12 IEC 61000-4-11 IEC 61000-4-3 IEC 61000-4-5
Ip Degree Of Protection	IP20 IEC 60529 terminal block) IP40 IEC 60529 front panel)
Environmental Characteristic	EMC directive IEC 61000-6-2 EMC directive IEC 61000-6-3 EMC directive IEC 61000-6-4 EMC directive IEC 61131-2 zone B Low voltage directive IEC 61131-2
Disturbance Radiated/Conducted	Class B EN 55022-11 group 1
Pollution Degree	2 IEC 61131-2
Ambient Air Temperature For Operation	-4…104 °F (-20…40 °C) in non-ventilated enclosure IEC 60068-2-1 and IEC 60068-2-2 -4…131 °F (-20…55 °C) IEC 60068-2-1 and IEC 60068-2-2
Ambient Air Temperature For Storage	-40…158 °F (-40…70 °C)
Operating Altitude	6561.68 ft (2000 m)
Maximum Altitude Transport	10000.00 ft (3048 m)
Relative Humidity	95 % without condensation or dripping water

Ordering and shipping details

Category	US1000I22000
Discount Schedule	000I
Gtin	3389110549904
Returnability	No
Country Of Origin	FR

Packing Units

Unit Type Of Package 1	PCE
Number Of Units In Package 1	1
Package 1 Height	2.56 in (6.500 cm)
Package 1 Width	3.94 in (10.000 cm)
Package 1 Length	3.46 in (8.800 cm)
Package 1 Weight	7.27 oz (206.000 g)
Unit Type Of Package 2	S03
Number Of Units In Package 2	30
Package 2 Height	11.81 in (30.000 cm)
Package 2 Width	11.81 in (30.000 cm)
Package 2 Length	15.75 in (40.000 cm)
Package 2 Weight	15.06 lb(US) (6.830 kg)

Contractual warranty

Warranty	18 months

Sustainability

Green Premium™ label is Schneider Electric's commitment to delivering products with best-in-class environmental performance. Green Premium promises compliance with the latest regulations, transparency on environmental impacts, as well as circular and low-CO_2 products.

Guide to assessing product sustainability is a white paper that clarifies global eco-label standards and how to interpret environmental declarations.

Learn more about Green Premium >

Guide to assess a product's sustainability >

Transparency RoHS/REACh

Well-being performance

Mercury Free	
Rohs Exemption Information	Yes
Pvc Free	

Certifications & Standards

Reach Regulation	REACh Declaration
Eu Rohs Directive	Pro-active compliance (Product out of EU RoHS legal scope)
China Rohs Regulation	China RoHS declaration
Environmental Disclosure	Product Environmental Profile
Weee	The product must be disposed on European Union markets following specific waste collection and never end up in rubbish bins.
Circularity Profile	End of Life Information
California Proposition 65	WARNING: This product can expose you to chemicals including: Lead and lead compounds, which is known to the State of California to cause cancer and birth defects or other reproductive harm. For more information go to www.P65Warnings.ca.gov

Dimensions Drawings

Compact and Modular Smart Relays

Mounting on 35 mm/1.38 in. DIN Rail

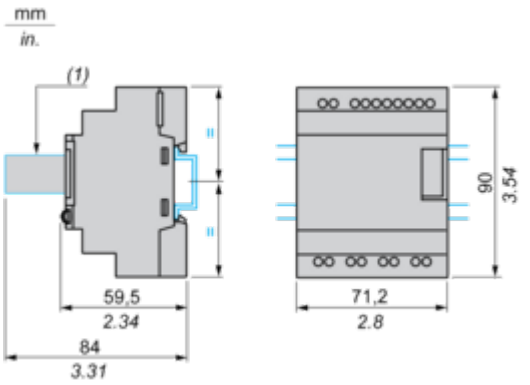

(1) With SR2USB01 or SR2BTC01

Screw Fixing (Retractable Lugs)

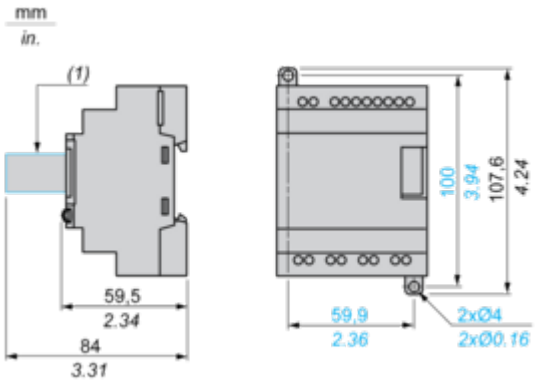

(1) With SR2USB01 or SR2BTC01

Position of Display

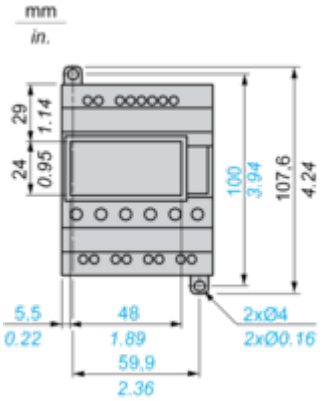

Connections and Schema

Compact and Modular Smart Relays

Connection of Smart Relays on DC Supply

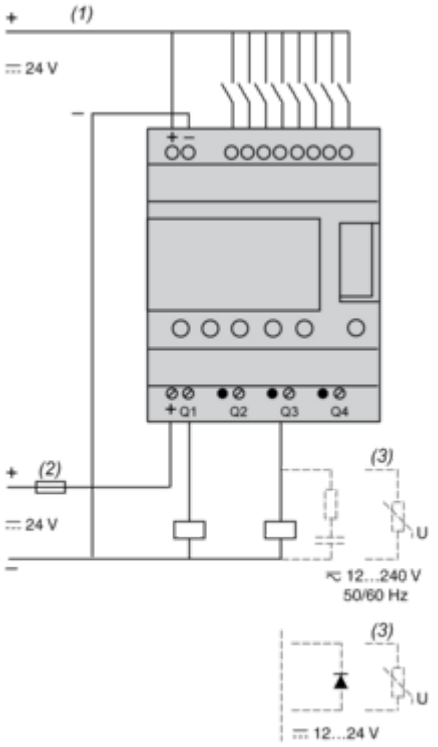

(1) 1 A quick-blow fuse or circuit-breaker.
(2) Fuse or circuit-breaker.
(3) Inductive load.
(4) Q9 and QA: 5 A (max. current in terminal C: 10 A).

Discrete Input Used for 3-Wire Sensors

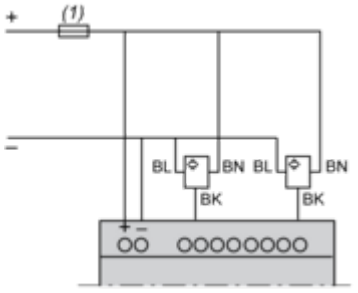

(1) 1 A quick-blow fuse or circuit-breaker.

Connection of Smart Relays on DC Supply

Analog Inputs

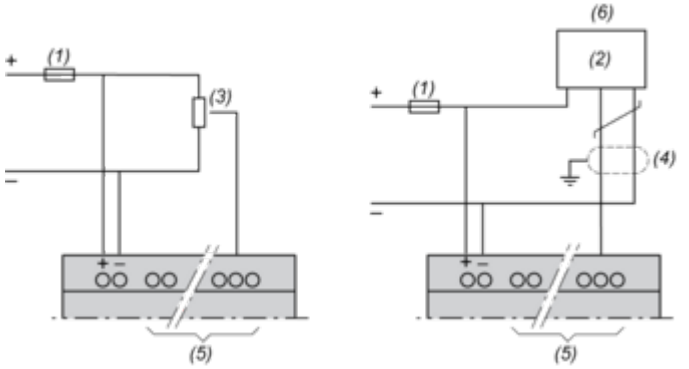

(1) 1 A quick-blow fuse or circuit-breaker.
(2) Ca: Analog sensor / Ta: Analog transmitter.
(3) Recommended values: 2.2 kΩ / 0.5 W (10 kΩ max.)
(4) Screened cables, maximum length 10 m / 32.80 feet.
(5) Analog inputs according to Zelio Logic smart relay type (see table below)
(6) 0-10 Vdc ANALOG

Smart Relays	Analog Inputs
SR2•12••D	IB…IE
SR2A201BD	IB and IC
SR2D201BD	IB and IC
SR2B20••D	IB…IG
SR2E201BD	IB…IG
SR3B10•BD	IB…IE
SR3B26••D	IB…IG

Connection of Smart Relays on DC Supply, with Discrete I/O Extension Modules

SR3B•••JD + SR3XT•••JD, SR3B•••BD + SR3XT•••BD

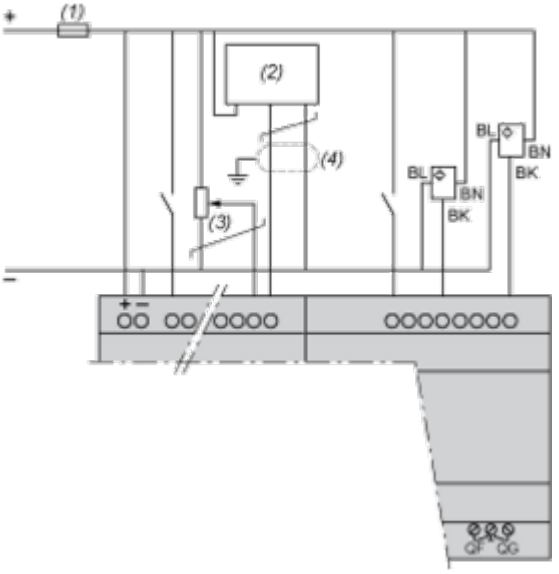

(1) 1 A quick-blow fuse or circuit-breaker.
(2) Ca: Analog sensor / Ta: Analog transmitter.
(3) Recommended values: 2.2 kΩ / 0.5 W (10 kΩ max.)
(4) Screened cables, maximum length 10 m / 32.80 feet.

NOTE: QF and QG : 5 A for SR3XT141••

Connection of Thermistor Input on DC Supply

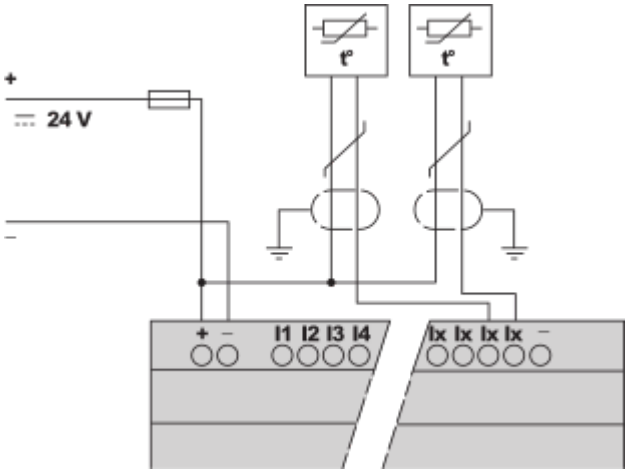

NOTE: Ix = IB...IG

Performance Curves

Compact and Modular Smart Relays

Electrical Durability of Relay Outputs

(in millions of operating cycles, conforming to IEC/EN 60947-5-1)
DC-12 (1)

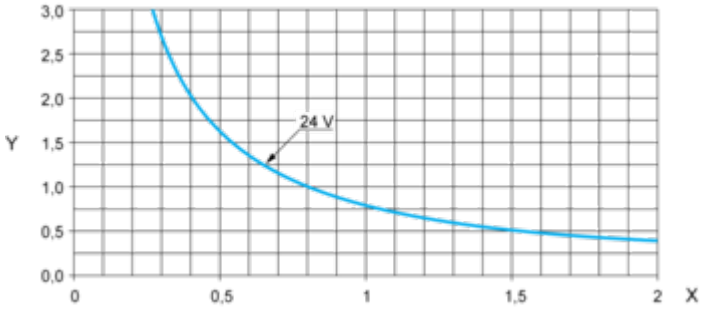

X: Current (A)
Y: Millions of operating cycles
(1) DC-12: control of resistive loads and of solid state loads isolated by opto-coupler, L/R ≤ 1 ms.

DC-13 (1)

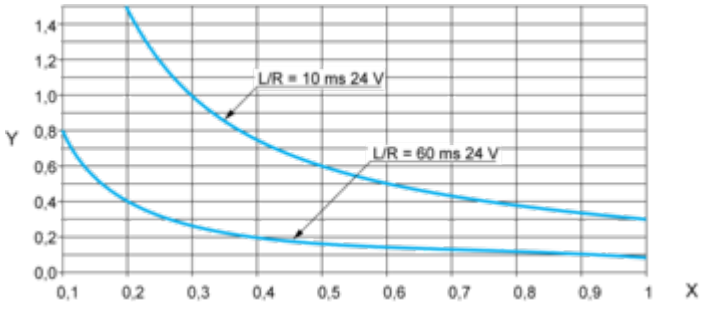

X: Current (A)
Y: Millions of operating cycles
(1) DC-13: switching electromagnets, L/R ≤ 2 x (Ue x Ie) in ms, Ue: rated operational voltage, Ie: rated operational current (with a protection diode on the load, DC-12 curves must be used with a coefficient of 0.9 applied to the number in millions of operating cycles).